JORDAN VALLEY WATER CONSERVANCY DISTRICT

JORDAN VALLEY WATER CONSERVANCY DISTRICT
WEST JORDAN, UTAH

JORDAN VALLEY WATER TREATMENT PLANT
FILTER AND CHEMICAL FEED UPGRADES

JVWCD PROJECT #4289

ADDENDUM NO. 5
TO THE
CONTRACT DOCUMENTS

June 2025

Digitally signed by Stetson Sky Bassett
Contact Info: Carollo Engineers, Inc.
Date: 2025.06.06 14:58:00-06'00'

REGISTERED PROFESSIONAL ENGINEER
No. 12149234-2202
STETSON SKY BASSETT
STATE OF UTAH

carollo®

7090 SOUTH UNION PARK AVENUE, SUITE 600 ▪ MIDVALE, UTAH 84047 ▪ P 801-233-2500

Bidders on the above-named project are hereby notified that the Bidding Documents are modified as indicated below. Bidders are required to acknowledge receipt of this Addendum in the space provided on the Document C-1 Bid Form.

This addendum consists of the following items:

ADDENDUM ITEM	NO. OF PAGES
This document (including cover page)	5
Drawing Markups	28
Answers to Bidder Questions	2
Attachment A: Magnetic Flow Transmitter ISA Data Sheets	35

This Addendum shall become part of the Contract and the provisions of the Contract apply.

NOTICE: Acknowledgement of the receipt for all five Addendums must be included in the bid form.

Bids are due by 2:00 pm on June 12, 2025.

SPECIFICATIONS

The following sections are modified as indicated below.

1. DIVISION 0:
   a. **REMOVE** the following paragraph in the section titled "AWARD OF CONTRACT":

      ~~In evaluating Bids, the Owner will consider compliance with the prescribed requirements, including the alternates and other data as requested in the Bid Form. The evaluation of bids will be based on the total bid price, including any owner selected bid alternates.~~

      Note, this paragraph was added by Addendum 1 and is now removed by Addendum 5.

   b. **REMOVE** page C-5 BID ALTERNATE SCHEDULE. Note, this page was added by Addendum 1 and is now removed by Addendum 5.
2. SECTION 01230 – ALTERNATES:
   a. **REMOVE** this Specification section, in its entirety.
3. SECTION 03300 – CAST-IN-PLACE CONCRETE:
   a. **REPLACE** Table 3 on page 23 with the following:

Table 3: Concrete Classes

Concrete Class[1]	Minimum Specified Compressive Strength at 28 days, f'c [2] (pounds per square inch)	Ratio of water to cementitious materials[3] (minimum - maximum).	Cementitious Materials Content (pounds per cubic yard of concrete by weight)[4]	Cement Type	Maximum Chloride Content (percent by weight of cement)	Maximum Size of Coarse Aggregate (ASTM C33)	Air Entrainment (percent), (n/a: not applicable)	Admixtures required[4,5,6]	Slump Range (inches)
A	4,500	0.40 to 0.42	535 to 650	ASTM C150, Type II(MH) or ASTM C595, Type IL(<15)(MS) or IP(20)(MS)	0.10	#57	6±1.5	AEA WRA	2 to 4
C	2,500	0.62 max.	423 min.	ASTM C150, Type II(MH) or ASTM C595, Type IL(<15)(MS) or IP(20)(MS)	No limit	#57	6±1.5	AEA WRA	3 to 6
CE	3,000	0.62 max.	423 min.	ASTM C150, Type II(MH) or ASTM C595, Type IL(<15)(MS) or IP(20)(MS)	No limit	#8	5±1.5	AEA WRA	3 to 6
PM	5,000	0.40	535 to 650	ASTM C150, Type II(MH) or ASTM C595, Type IL(<15)(MS) or IP(20)(MS)	0.15	#57	6±1.5	AEA WRA	3 to 6
M	4,500	0.40 to 0.42	535 to 650	ASTM C150, Type II(MH) or ASTM C595, Type IL(<15)(MS) or IP(25)(MS)	0.10	#4	6±1.5	AEA WRA	2 to 4

Notes:

(1) Sub classes within major concrete classes are designated as follows:
NA: Without air entrainment.

(2) At locations where concrete will not be subjected to load from other elements of the structure or from the Contractor's placing and/or backfilling operations, maximum time period for achievement of specified compressive strength may be extended to 56 days when accepted by the Engineer.

4. SECTION 11260 – GASEOUS CHLORINATION SYSTEM:
   a. **ADD** the following language to paragraph 2.14.D:

4. Route the outlet pipe to the exterior of the building, as indicated on the drawings, and install a No. 14 screen at the outlet.

5. SECTION 13207 – STRAND-WOUND CIRCULAR PRESTRESSED CONCRETE TANK WITH A TYPE I CORE WALL AND DOMED ROOF:
   a. **MODIFY** the following language to paragraph 1.05.A.2.b:

      The Tank (Sub)Contractor shall have in its employ for this project a team, comprised of staff of both the Tank Contractor and Tank Pre-stressor, consisting of an on-site project manager, concrete foreman, shotcrete foreman, and prestressing foreman, each of whom shall have constructed in the last 10 years a minimum of 5 AWWA D110 Type I tanks, 2 of which were constructed with domed concrete roofs, having a capacity of 1.0 MG or greater.

   b. **REMOVE** the following language from the end of paragraph 1.05.A.3:

      "The design engineer shall be licensed as a structural engineer in the state of Utah."

   c. **REPLACE** paragraphs 1.06.D.10.b.5), 1.06.D.10.c.5), and 1.06.D.10.d.3) with:

      Site Class C

   d. **REPLACE** paragraphs 2.01.I.6.b.1) with:

      Materials: Type 316/316L stainless steel.

   e. **REPLACE** section 2.01.I.8.b.1) with:

      All Type 316 stainless steel components, unless otherwise accepted by the engineer.

6. SECTION 13226 – FILTER MEDIA:
   a. **ADD** the following to paragraph 2.04.A:

      3. F.B. Leopold Co, Inc.

7. SECTION 15122 – BUTTERFLY VALVES:
   a. **MODIFY** paragraph 2.01.A.2 as follows:

      2. ~~General purpose AWWA~~ Butterfly valves:

         a. Design standard: Provide valves designed and manufactured in accordance with paragraph 2.04 DOUBLE ECCENTRIC/OFFSET BUTTERFLY VALVES.

         b. All butterfly valves shall be high performance, Double Eccentric/Offset Butterfly Valves unless specifically indicated otherwise.

         ~~c. Class:~~

            ~~2) Provide butterfly valves in accordance with AWWA Class 150B, unless otherwise specified.~~

            ~~2) Provide butterfly valves in accordance with AWWA Class 250B in piping systems with test pressure greater than 150 pounds per square inch gauge and less than 250 pounds per square inch gauge.~~

8. SECTION 16990A – CONDUIT SCHEDULE – AREA 01:
   a. **REPLACE** conduit L-01-064 with the following:

L-01-064	02E01	2"	2	#8	XHHW-2	1	#8	XHHW-2	FR:	PB-14	
									TO:	PNL-CS	
									2 #8	>> PNL-CELL POWER	L-01-063

9. SECTION 17302 – FLOW MEASUREMENT: MAGNETIC FLOWMETERS:
   a. **REPLACE** Attachment A in its entirety.

10. SECTION 17406 – PRESSURE/VACUUM MEASUREMENT DIFFERENTIAL:
    a. **REMOVE** the following from paragraph 2.03.A:
       1. 2. Endress+Hauser Deltabar S Series.
       2. 3. SMAR, LD300 Series.

DRAWINGS

Note to Bidders on addenda drawings: The addenda drawings make use of color coding to show revisions made by addendum. The following color codes are used, for clarity:
Red is used to highlight additions, corrections, or changes that are incorporated into the drawing.
Green is used to indicate items that shall be removed or deleted from the drawing.
Blue is used for comments, notes, clarifications, or instructions that may not be physically added to the drawing itself.

The following drawings are modified as indicated below.

REPLACE the following drawings in their entirety with the drawings attached:

b. 00G11
c. 00G12
d. 00G14
e. 41S02
f. 41S03
g. 30M16
h. 63M03
i. 00GE06
j. 01E02
k. 30N03
l. 30N04
m. 30N05
n. 30N06
o. 30N07
p. 30N08
q. 30N09
r. 30N10
s. 30N11
t. 30N12
u. 30N13
v. 30N14
w. 30N15
x. 30N16
y. 30N17
z. 30N18
aa. 30N20
bb. 30N21
cc. 30N24

ABBREVIATIONS

ABBREVIATIONS TO DESIGNATE TEST PRESSURE/METHOD PER SPECIFICATION SECTION 15956:	
AM	AIR METHOD
GR	GRAVITY METHOD
HH	HIGH HEAD METHOD
LH	LOW HEAD METHOD
SC	SPECIAL CASE
ABBREVIATIONS TO DESIGNATE PIPE MATERIAL:	
BSP	BLACK STEEL PIPE
CI	CAST IRON
CISP	CAST IRON SOIL PIPE
CPVC	CHLORINATED POLYVINYL CHLORIDE
DIP	DUCTILE IRON PIPING
FRP	FIBERGLASS REINFORCED PIPE
GSP	GALVANIZED STEEL PIPE
HDPE	HIGH DENSITY POLYETHYLENE
PVC	POLYVINYL CHLORIDE
RGRCP	RUBBER GASKETED REINFORCED CONCRETE PIPE
SST	STAINLESS STEEL
VCP	VITRIFIED CLAY PIPING
ABBREVIATIONS TO DESIGNATE CLASS, SCHEDULE, OR THICKNESS:	
CL	CLASS, FOLLOWED BY THE DESIGNATION
GA	GAUGE, PRECEDED BY THE DESIGNATION
SCH	SCHEDULE, FOLLOWED BY THE DESIGNATION
SDR	STANDARD DIMENSION RATIO
ABBREVIATIONS TO DESIGNATE PIPING JOINTS/FITTINGS:	
B&SP	BELL & SPIGOT
BFW	BUTT FUSION WELD
BW	BUTT-WRAPPED
BZD	BRAZED
CF	COMPRESSION FITTING
FL	FLANGED
FLR	FLARED
GE	GROOVED END JOINT
MJ	MECHANICAL JOINT
NH	NO HUB
PO	PUSH ON
PRF	PRESS FIT
RMJ	RESTRAINED MECHANICAL JOINT
RPO	RESTRAINED PUSH ON
SCRD	SCREWED
SFW	SOCKET FUSION WELD
SLD	SOLDERED
SW	SOLVENT WELD
WLD	WELDED
ABBREVIATIONS TO DESIGNATE LINING AND COATINGS:	
CEP	CERAMIC EPOXY
CTP	COAL TAR PITCH
CM	CEMENT MORTAR
EPU	EPOXY AND POLYURETHANE COATING SYSTEM PER SECTION 09960
FBE	FUSION BONDED EPOXY
GL	GLASS LINING
PCP	PLURAL COMPONENT POLYURETHANE
PEN	POLYETHYLENE ENCASED
PTW	POLYETHYLENE TAPE WRAP
WAE	WATERBORNE ACRYLIC EMULSION
NOTE:	BOND ALL JOINTS ON BURIED AND ENCASED DIP AND STEEL PIPING AS DIRECTED ON CATHODIC PROTECTION DRAWINGS.
WXT	WAX TAPE

PIPE SCHEDULE

ABBR.	SERVICE	DIAMETER (INCHES)	MATERIALS	PRESSURE CL, SPECIAL THICKNESS CL, OR SCHEDULE	JOINTS/ FITTINGS	TEST PRESSURE/ METHOD	LINING	COATING	PIPE SPEC SECTION	COMMENTS
A	AIR									
	BURIED	ALL	STEEL	SCH 40	SCRD, WLD, FL, OR GE	PER APPLICABLE PLUMBING CODES	NONE	PCB,FBE,PTW, WXT	15270	
AS	AIR SCOUR									
	EXPOSED	ALL	316 SST	PER SPECIFICATION	WLD OR FL	25 PSI/AM	NONE	NONE	15286	
BWS	BACKWASH SUPPLY									
	EXPOSED	ALL	STEEL	AWWA C200	WLD, FL, OR GE	125 PSI/HH	CM	EPU	15278	
	BURIED	ALL	STEEL	AWWA C200	WLD		CM	PCP,WXT	15272	
CDX	CHLORINE DIOXIDE									
	EXPOSED	ALL	CPVC	SCH 80	SW	50 PSI/HH	NONE	NONE	15230	
	BURIED	CHEMICAL	PVC BRAID REINFORCED FLEXIBLE TUBING	-	BARBED / SS CLAMPED		NONE	NONE	15230	FINGER LAKES EXTRUSION BRAIDFLEX 70N OR SIMILAR. NO FITTINGS OR JOINTS ARE ALLOWED IN THE CARRIER PIPE - THEY MUST BE LOCATED IN THE BUILDINGS OR THE CHEMICAL YARD VAULTS
CLS	CHLORINE SOLUTION									
	EXPOSED	ALL	PVC	SCH 80	SW	150 PSI/HH	NONE	NONE	15230	
	BURIED	CHEMICAL	PVC BRAID REINFORCED FLEXIBLE TUBING	-	BARBED / SS CLAMPED		NONE	NONE	15230	FINGER LAKES EXTRUSION BRAIDFLEX 70N OR SIMILAR. NO FITTINGS OR JOINTS ARE ALLOWED IN THE CARRIER PIPE - THEY MUST BE LOCATED IN THE BUILDINGS OR THE CHEMICAL YARD VAULTS. ALL BURIED CHEMICAL PIPING SHALL BE CONTAINED WITHIN A CARRIER PIPE. PIPE CALLOUTS IN DRAWINGS REPRESENT FLEXIBLE TUBING SIZE AND NOT CARRIER PIPE SIZE
	BURIED	CARRIER PIPE	HDPE	SDR 17, ASTM D3350	BFW	10 FEET/GR	NONE	NONE	15241	ALL INTERNAL WELD BEADS SHALL BE REMOVED FROM CARRIER PIPE.
CLG	CHLORINE GAS UNDER VACUUM									
	EXPOSED	ALL	PVC 1	SCH 80	SW	VACUUM/AM	NONE	NONE	15230	
	BURIED	CHEMICAL	FEP TUBING	0.0625 WALL	INSERT		NONE	NONE	15230	NO FITTINGS OR JOINTS ARE ALLOWED IN THE CARRIER PIPE - THEY MUST BE LOCATED IN THE BUILDINGS OR THE CHEMICAL YARD VAULTS. ALL BURIED CHEMICAL PIPING SHALL BE CONTAINED WITHIN A CARRIER PIPE. PIPE CALLOUTS IN DRAWINGS REPRESENT FLEXIBLE TUBING SIZE AND NOT CARRIER PIPE SIZE
	BURIED	CARRIER PIPE	HDPE	SDR 17, ASTM D3350	BFW	10 FEET/GR	NONE	NONE	15241	ALL INTERNAL WELD BEADS SHALL BE REMOVED FROM CARRIER PIPE.
CS	CAUSTIC SODA									
	EXPOSED	ALL	CPVC	SCH 80	SW	150 PSI/HH	NONE	NONE	15230	
	BURIED	CHEMICAL	PVC BRAID REINFORCED FLEXIBLE TUBING	-	BARBED / SS CLAMPED		NONE	NONE	15230	FINGER LAKES EXTRUSION BRAIDFLEX 70N OR SIMILAR. NO FITTINGS OR JOINTS ARE ALLOWED IN THE CARRIER PIPE - THEY MUST BE LOCATED IN THE BUILDINGS OR THE CHEMICAL YARD VAULTS. ALL BURIED CHEMICAL PIPING SHALL BE CONTAINED WITHIN A CARRIER PIPE. PIPE CALLOUTS IN DRAWINGS REPRESENT FLEXIBLE TUBING SIZE AND NOT CARRIER PIPE SIZE.
	BURIED	CARRIER PIPE	HDPE	SDR 17, ASTM D3350	BFW	10 FEET/GR	NONE	NONE	15241	ALL INTERNAL WELD BEADS SHALL BE REMOVED FROM CARRIER PIPE.
DMW	DEMINERALIZED WATER									
	ALL	ALL	PVC	SCH 80	SW	150 PSI/HH	NONE	NONE	15230	
D	DRAIN									
	EXPOSED	1/2 TO 1-1/2	316 SST	PER SPECIFICATION	WLD, FL, GE, OR PRF	10 FEET/GR	NONE	NONE	15286	
		2 TO 10	CPVC	SCH 80	SW		NONE	NONE	15230	
	BURIED	8	C900	350	RPO OR RMJ		NONE	NONE	15244	8" DRAINLINE FROM EXISTING BACKWASH TANK.
		1/2 TO 10	CPVC	SCH 40	SW		NONE	NONE	15230	
		24	RCP	CLASS III	B&SP	NONE	NONE	NONE	15229	24" OVERFLOW DRAINLINE FROM BACKWASH TANK
		4"	PVC	SCH 40	SW		NONE	NONE	15230	BACKWASH TANK UNDERDRAIN
DP	DRAIN - PROCESS									
	EXPOSED	ALL	DIP	350	FL OR GE	150PSI/HH	CM	EPU	15211	
F	FLUORIDE SOLUTION									
	EXPOSED	ALL	PVC	SCH 80	SW	150 PSI/HH	NONE	NONE	15230	
	BURIED	CHEMICAL	PVC BRAID REINFORCED FLEXIBLE TUBING	-	BARBED / SS CLAMPED		NONE	NONE	15230	FINGER LAKES EXTRUSION BRAIDFLEX 70N OR SIMILAR. NO FITTINGS OR JOINTS ARE ALLOWED IN THE CARRIER PIPE - THEY MUST BE LOCATED IN THE BUILDINGS OR THE CHEMICAL YARD VAULTS. ALL BURIED CHEMICAL PIPING SHALL BE CONTAINED WITHIN A CARRIER PIPE. PIPE CALLOUTS IN DRAWINGS REPRESENT FLEXIBLE TUBING SIZE AND NOT CARRIER PIPE SIZE
	BURIED	CARRIER PIPE	HDPE	SDR 17, ASTM D3350	BFW	10 FEET/GR	NONE	NONE	15241	ALL INTERNAL WELD BEADS SHALL BE REMOVED FROM CARRIER PIPE.
FIW	FILTER INFLUENT WATER									
	EXPOSED	ALL	STEEL	AWWA C200	WLD, FL, OR GE	25 PSI/HH	CM	EPU	15278	
	BURIED	ALL	STEEL	AWWA C200	WLD		CM	PCP,WXT	15272	
FLW	FILTERED WATER									
	EXPOSED	ALL	STEEL	AWWA C200	WLD, FL, OR GE	25 PSI/HH	CM	EPU	15278	
	BURIED	ALL	STEEL	AWWA C200	WLD		CM	PCP,WXT	15272	
FTW	FILTER TO WASTE									
	EXPOSED	ALL	STEEL	AWWA C200	WLD, FL, OR GE	25 PSI/HH	CM	EPU	15278	
	BURIED	ALL	STEEL	AWWA C200	WLD		CM	PCP,WXT	15272	
FW	FINISHED WATER									
	EXPOSED	ALL	STEEL	AWWA C200	WLD, FL, OR GE	25 PSI/HH	CM	EPU	15278	
	BURIED	ALL	STEEL	AWWA C200	WLD		CM	PCP,WXT	15272	
HWR	HOT WATER RETURN									
	EXPOSED	2 AND SMALLER	COPPER	ASTM B88	SOLDERED	150 PSI/HH	NONE	NONE	15281	
HWS	HOT WATER SUPPLY									
	EXPOSED	2 AND SMALLER	COPPER	ASTM B88	SOLDERED	150 PSI/HH	NONE	NONE	15281	
NG	NATURAL GAS									
	EXPOSED	2 AND SMALLER	STEEL, BLACK ASTM 53	SCH 40	SCRD OR WLD	PER APPLICABLE PLUMBING CODES	NONE	NONE	15270	
	EXPOSED	2-1/2 AND LARGER	STEEL, BLACK ASTM 53	SCH 40	FL		NONE	EPU	15270	
	BURIED	ALL	ASTM D2513 MDPE	SDR 11	BFW OR SFW		NONE	NONE	15230	

PIPE SCHEDULE CONTINUED ON NEXT SHEET

REV	DATE	BY	DESCRIPTION
2	06/04/2025	SSB	ADDENDUM NO. 5
1	04/15/2025	SSB	ADDENDUM NO. 1

BID SET

DESIGNED DES
DRAWN RB
CHECKED
DATE FEBRUARY 2025

REGISTERED PROFESSIONAL ENGINEER No. 12149234-2202 STETSON SKY BASSETT STATE OF UTAH

carollo

JORDAN VALLEY WATER CONSERVANCY DISTRICT

JORDAN VALLEY WATER TREATMENT PLANT
FILTER AND CHEMICAL FEED UPGRADES
GENERAL
PIPE SCHEDULE 1

VERIFY SCALES
BAR IS ONE INCH ON ORIGINAL DRAWING
0 1"
IF NOT ONE INCH ON THIS SHEET, ADJUST SCALES ACCORDINGLY

JOB NO. 202001.10
DRAWING NO. 00G11
SHEET NO.
OF

Plot Date: 10-FEB-2025 8:39:48 AM
User: svcPW
PlotScale: 1:1
DesignScript: Carollo_Std_Pen_v0905.pen
ColorTable: gshade.ctb
Model: Layout1
LAST SAVED BY: RBhatia

PIPE SCHEDULE (CONT'D)

ABBR.	SERVICE	DIAMETER (INCHES)	MATERIALS	PRESSURE CL, SPECIAL THICKNESS CL, OR SCHEDULE	JOINTS/ FITTINGS	TEST PRESSURE/ METHOD	LINING	COATING	PIPE SPEC SECTION	COMMENTS
OF	OVERFLOW									
	EXPOSED	ALL	CPVC	SCH 80	SW	20 FEET/GR	NONE	NONE	15230	FOR CAUSTIC SODA SERVICE
	EXPOSED	ALL	PVC	SCH 80	SW	20 FEET/GR	NONE	NONE	15230	
PAC	POWDERED ACTIVATED CARBON									
	EXPOSED	ALL	PVC	SCH 80	SW	50 PSI/HH	NONE	NONE	15230	
	BURIED	ALL	HDPE	ASTM D2737	BFW OR CF		NONE	NONE	15230	
PC	PRIMARY COAGULANT									
	EXPOSED	ALL	PVC	SCH 80	SW	50 PSI/HH	NONE	NONE	15230	
PEA	ANIONIC POLYMER									
	EXPOSED	AFTER AGING TANK	PVC	SCH 80	SW	50 PSI/HH	NONE	NONE	15230	
PEC	CATIONIC POLYMER									
	EXPOSED	ALL	PVC	SCH 80	SW	50 PSI/HH	NONE	NONE	15230	
PW	POTABLE WATER									
	EXPOSED	3 AND SMALLER	PVC	SCH 80	SW	150 PSI/HH	NONE	NONE	15230	
	EXPOSED	4 TO 12	DIP	350	FL OR GE		CM	EPU	15211	
	BURIED	2 AND SMALLER	HDPE	ASTM D2737	BFW OR CF		NONE	NONE	15230	
	BURIED	4 TO 12	DIP	350	RPO OR RMJ		CM	DOUBLE PEN	15211	
	BURIED	4 to 8	C900	350	RPO OR RMJ		NONE	NONE	15244	WXT/FBE COATING FOR METALLIC FITTINGS
SA	SAMPLE LINE									
	EXPOSED	ALL	PVC	SCH 80	SW	50 PSI/HH	NONE	NONE	15230	
SD	STORM DRAIN									
	BURIED	15	DIP	CL 53	PO OR MJ	NONE	CM	DOUBLE PEN	15211	
	BURIED	21	RGRCP	CL IV	B&SP	NONE	NONE	NONE	15229	
SP	SPARE CHEMICAL									
	EXPOSED	ALL	PVC	SCH 80	SW	50 PSI/HH	NONE	NONE	15230	
	BURIED	ALL	PVC BRAID REINFORCED FLEXIBLE TUBING	-	BARBED / SS CLAMPED		NONE	NONE	15230	FINGER LAKES EXTRUSION BRAIDFLEX 70N OR SIMILAR. NO FITTINGS OR JOINTS ARE ALLOWED IN THE CARRIER PIPE - THEY MUST BE LOCATED IN THE BUILDINGS OR THE CHEMICAL YARD VAULTS. ALL BURIED CHEMICAL PIPING SHALL BE CONTAINED WITHIN A CARRIER PIPE. PIPE CALLOUTS IN DRAWINGS REPRESENT FLEXIBLE TUBING SIZE AND NOT CARRIER PIPE SIZE.
	BURIED	CARRIER PIPE	HDPE	SDR 17, ASTM D3350	BFW	10 FEET/GR	NONE	NONE	15241	ALL INTERNAL WELD BEADS SHALL BE REMOVED FROM CARRIER PIPE.
SPD	SUMP PUMP DISCHARGE									
	EXPOSED	4 TO 12	DIP	350	FL OR GE	50 PSI/HH	CM	EPU	15211	
	SUBMERGED	ALL	316 SST	PER SPECIFICATION	WLD, FL, GE, OR PRF		NONE	NONE	15286	
SS	SANITARY SEWER									
	BURIED	ALL	PVC	SDR 35	B&SP	10 FEET/GR	NONE	NONE	15230	WXT/FBE COATING FOR METALLIC FITTINGS
UW	UTILITY WATER									
	EXPOSED	3 AND SMALLER	PVC 1	SCH 80	SW	150 PSI/HH	NONE	NONE	15230	
	EXPOSED	4 TO 12	DIP	350	FL OR GE		CM	EPU	15211	
V	VENT									
	ALL	ALL	PVC	SCH 80	SW	10 FEET/GR	NONE	NONE	15230	
	EXPOSED	6	STL	SCH 40	SCRD, FL, GE	150 PSI/HH	NONE	NONE	15278	
WW	WASTE WASHWATER (FILTER/BW)									
	EXPOSED	ALL	STEEL	AWWA C200	WLD, FL, OR GE	20 FEET/GR	CM	EPU	15278	
	BURIED	ALL	STEEL	AWWA C200	WLD, FL, OR GE		CM	PCP	15272	
	EXPOSED	BEFORE AGING TANK	304 SST	PER SPECIFICATION	PER SPECIFICATION	PER MANUFACTURER	NONE	NONE	11256	

2

REV	DATE	BY	DESCRIPTION
2	06/04/2025	SSB	ADDENDUM NO. 5
1	04/15/2025	SSB	ADDENDUM NO. 1

BID SET

DESIGNED DES
DRAWN RB
CHECKED
DATE FEBRUARY 2025

REGISTERED PROFESSIONAL ENGINEER No. 12149234-2202 STETSON SKY BASSETT STATE OF UTAH

carollo

JORDAN VALLEY WATER CONSERVANCY DISTRICT

JORDAN VALLEY WATER TREATMENT PLANT
FILTER AND CHEMICAL FEED UPGRADES
GENERAL
PIPE SCHEDULE 2

VERIFY SCALES
BAR IS ONE INCH ON ORIGINAL DRAWING
0 1"
IF NOT ONE INCH ON THIS SHEET, ADJUST SCALES ACCORDINGLY

JOB NO. 202001.10
DRAWING NO. 00G12
SHEET NO.
OF

Plot Date: 10-FEB-2025 8:40:31 AM
User: svcPW
PlotScale: 1:1
DesignScript: Carollo_Std_Pen_v0905.pen
ColorTable: gshade.ctb
Model: Layout1
LAST SAVED BY: RBhatia

Plot Date: 4/11/2024 3:35:40 PM

VALVE AND ACTUATOR SCHEDULE CONTINUED

VALVE TAG	VALVE TYPE	DESCRIPTION	SIZE, INCHES	OPERATOR	VALVE ENDS	VALVE SPEC	ACTUATOR TAG	OPERATOR TYPE	VOLTAGE	PHASE	HP	OPERATING TIME	ACTUATOR SPEC
VAL-3157	VALVE - BUTTERFLY	FILTER 15 WASTE WASHWATER VALVE	42	MOTOR	FLANGED; CLASS 150B	15112	FV-3157	OPEN/CLOSE	480	3	1/2	2 TO 3 MINUTES	13447
VAL-3161	VALVE - BUTTERFLY	FILTER 16 INLET VALVE	36	MOTOR	FLANGED; CLASS 150B	15112	FV-3161	POSITION	480	3	1/2	2 TO 3 MINUTES	13447
VAL-3162	VALVE - BUTTERFLY	FILTER 16 EFFLUENT VALVE	30	MOTOR	FLANGED; CLASS 150B	15112	FV-3162	POSITION	480	3	1/2	1 TO 2 MINUTES	13447
VAL-3163	VALVE - BUTTERFLY	FILTER 16 FILTER TO WASTE VALVE	24	MOTOR	FLANGED; CLASS 150B	15112	FV-3163	POSITION	480	3	1/2	1 TO 2 MINUTES	13447
VAL-3164	VALVE - BUTTERFLY	FILTER 16 BACKWASH VALVE	36	MOTOR	FLANGED; CLASS 150B	15112	FV-3164	OPEN/CLOSE	480	3	1/2	2 TO 3 MINUTES	13447
VAL-3166(1)	VALVE - BUTTERFLY	FILTER 16 VENT VALVE	6	MOTOR	FLANGED; CLASS 150B	15112	FV-3166	OPEN/CLOSE	480	3	1/2	30 SECONDS	13447
VAL-3167	VALVE - BUTTERFLY	FILTER 16 WASTE WASHWATER VALVE	42	MOTOR	FLANGED; CLASS 150B	15112	FV-3167	OPEN/CLOSE	480	3	1/2	2 TO 3 MINUTES	13447
VAL-4041(2)	VALVE - BUTTERFLY	MASTER BWS VALVE	30	MOTOR	FLANGED; CLASS 150B	15112	FV-4041	POSITION	480	3	1/2	1 TO 2 MINUTES	13447
VAL-4051(2)	VALVE - BUTTERFLY	BWS NORTH (ODD) CONTROL VALVE	36	MOTOR	FLANGED; CLASS 150B	15112	FV-4051	POSITION	480	3	1/2	1 TO 2 MINUTES	13447
VAL-4061(2)	VALVE - BUTTERFLY	BWS SOUTH (EVE) CONTROL VALVE	36	MOTOR	FLANGED; CLASS 150B	15112	FV-4061	POSITION	480	3	1/2	1 TO 2 MINUTES	13447
VAL-4112	VALVE - BUTTERFLY	BW TANK 1 EFFLUENT VALVE	36	MOTOR	FLANGED; CLASS 150B	15112	FV-4112	OPEN/CLOSE	480	3	1/2	1 TO 2 MINUTES	13447
VAL-4122	VALVE - BUTTERFLY	BW TANK 2 EFFLUENT VALVE	36	MOTOR	FLANGED; CLASS 150B	15112	FV-4122	OPEN/CLOSE	480	3	1/2	1 TO 2 MINUTES	13447
VAL-4131	VALVE - BUTTERFLY	BW STORAGE ISOLATION VALVE	36	MOTOR	FLANGED; CLASS 150B	15112	FV-4131	OPEN/CLOSE	480	3	1/2	1 TO 2 MINUTES	13447
VAL-4411	VALVE - BUTTERFLY	MASTER FILTER TO WASTE VALVE	24	MOTOR	FLANGED; CLASS 150B	15112	FV-4411	OPEN/CLOSE	480	3	1/2	1 MINUTE	13447

NOTES:
(1) EXISTING VALVE. ACTUATOR REPLACEMENT ONLY.
(2) MODBUS TCP COMMUNICATIONS

GENERAL NOTES:

1. NOT ALL VALVES ARE SHOWN IN THE SCHEDULE, VALVES SMALLER THAN 6-INCH SIZE ARE NOT SHOWN. MANUAL VALVES ARE NOT SHOWN. CONTRACTOR SHALL REFER TO MECHANICAL DRAWINGS AND P&ID'S FOR ADDITIONAL VALVE REQUIREMENTS.
2. NEMA RATING OF 4X FOR ALL ACTUATORS.
3. MODULATING ACTUATORS WILL HAVE ~1200 STARTS/HR. OPEN/CLOSE ACTUATORS WILL BE IN THE RANGE OF 0-60 STARTS/HR.

TANK SCHEDULE

EQUIPMENT TAG	P&ID DWG.	DESCRIPTION	TYPE	CAPACITY (GAL)	DIAMETER (FT)	HEIGHT (FT)	SPECIFICATION	COMMENTS
TNK-4121	30N20	BACKWASH TANK NO. 2	PRESTRESSED CONCRETE	1,000,000	74 △2	38.25	13207	
TNK-6211	62N02	PC DAY TANK	POLYETHYLENE	900	5.5	7	13208	
TNK-6501	65N01	CAUSTIC SODA TANK 1	FRP	18,000	12	22	13206A	
TNK-6502	65N01	CAUSTIC SODA TANK 2	FRP	18,000	12	22	13206A	
TNK-6503	65N01	CAUSTIC SODA TANK 3	FRP	18,000	12	22	13206A	
TNK-6531	65N02	CS DAY TANK	FRP	1,500	6	7	13206A	
TNK-6901	69N01	PEA AGING TANK 1	FRP	2,000	8	6	11256	PROVIDED BY VENDOR
TNK-6911	69N02	PEA AGING TANK 2	FRP	2,000	8	6	11256	PROVIDED BY VENDOR
TNK-7101	71N01	PEC TANK 1	POLYETHYLENE	4,600	10	10	13208	
TNK-7102	71N01	PEC TANK 2	POLYETHYLENE	4,600	10	10	13208	
TNK-7105	71N02	PEC DAY TANK	POLYETHYLENE	550	4	7	13208	

CHEMICAL FEEDER SCHEDULE

EQUIPMENT TAG	DESCRIPTION	SERVICE	TYPE	VOLTAGE	LOAD	LOAD UNITS	CAPACITY (GPH)	SPECIFICATION
PMP-6211	PRIMARY COAGULANT FEED PUMP 3	PC	DIAPHRAGM	120	1/4	KVA	52	11242
PMP-6221	PRIMARY COAGULANT FEED PUMP 4	PC	DIAPHRAGM	120	1/4	KVA	52	11242
PMP-6541	CAUSTIC SODA SMALL FEED PUMP 1	CS	DIAPHRAGM	120	1/4	KVA	52	11242
PMP-6562	CAUSTIC SODA SMALL FEED PUMP 2	CS	DIAPHRAGM	120	1/4	KVA	52	11242
PMP-6572	CAUSTIC SODA LARGE FEED PUMP 1	CS	HOSE	480	2	HP	720	11244
PMP-6582	CAUSTIC SODA LARGE FEED PUMP 2	CS	HOSE	480	2	HP	720	11244
PMP-6911	PEA FILTER AID SMALL FEED PUMP 1	PEA	DIAPHRAGM	120	1/4	KVA	52	11245
PMP-6916	PEA FILTER AID SMALL FEED PUMP 2	PEA	DIAPHRAGM	120	1/4	KVA	52	11245
PMP-6921	PEA FILTER AID LARGE FEED PUMP 1	PEA	HOSE	480	2	HP	720	11244
PMP-6926	PEA FILTER AID LARGE FEED PUMP 2	PEA	HOSE	480	2	HP	720	11244
PMP-6931	PEA FLOC AID FEED PUMP 1	PEA	HOSE	480	2	HP	720	11244
PMP-6936	PEA FLOC AID FEED PUMP 2	PEA	HOSE	480	2	HP	720	11244
PMP-6941	PEA FLOC AID FEED PUMP 3	PEA	HOSE	480	2	HP	720	11244
PMP-6946	PEA FLOC AID FEED PUMP 4	PEA	HOSE	480	2	HP	720	11244
PMP-6951	PEA STANDBY FEED PUMP	PEA	HOSE	480	2	HP	720	11244
PMP-6956	PEA FILTER AID DOSING PUMP	PEA	DIAPHRAGM	120	1/4	KVA	52	11245

PUMP SCHEDULE

EQUIPMENT TAG	DESCRIPTION	VOLTAGE	LOAD	LOAD UNITS	LOAD TYPE	SPECIFICATION	FLOW (GPM)	TDH
PMP-3911	FILTER DRAIN PUMP 1	480	5	HP	CONSTANT SPEED	11312K	600	16.5
PMP-3921	FILTER DRAIN PUMP 2	480	5	HP	CONSTANT SPEED	11312K	600	16.5
PMP-3931	FILTER DRAIN PUMP 1	120	1/2	HP	CONSTANT SPEED	11312J	60	10
PMP-3941	FILTER DRAIN PUMP 2	120	1/2	HP	CONSTANT SPEED	11312J	60	10
PMP-4125	VALVE VAULT SUMP PUMP	120	1/2	HP	CONSTANT SPEED	11312J	25	18
PMP-6201	PRIMARY COAGULANT TRANSFER PUMP 1	480	3/4	HP	CONSTANT SPEED	11312S	44	43
PMP-6202	PRIMARY COAGULANT TRANSFER PUMP 2	480	3/4	HP	CONSTANT SPEED	11312S	44	43
△1 PMP-6211	PRIMARY COAGULANT FEED PUMP 3	120	1/4	KVA	VARIABLE SPEED	11242	23	139
PMP-6221	PRIMARY COAGULANT FEED PUMP 4	120	1/4	KVA	VARIABLE SPEED	11242	23	139
PMP-6319	CHLORINE BUILDING SUMP PUMP	120	1/2	HP	CONSTANT SPEED	11312V	25	5
PMP-6511	CAUSTIC SODA TRANSFER PUMP 1	480	3/4	HP	CONSTANT SPEED	11312S	43	44
PMP-6521	CAUSTIC SODA TRANSFER PUMP 2	480	3/4	HP	CONSTANT SPEED	11312S	43	44
PMP-6541	CAUSTIC SODA SMALL FEED PUMP 1	120	1/4	KVA	VARIABLE SPEED	11242	30	139
PMP-6562	CAUSTIC SODA SMALL FEED PUMP 2	120	1/4	KVA	VARIABLE SPEED	11242	30	139
PMP-6572	CAUSTIC SODA LARGE FEED PUMP 1	480	2	HP	VARIABLE SPEED	11244	1.0	139
PMP-6582	CAUSTIC SODA LARGE FEED PUMP 2	480	2	HP	VARIABLE SPEED	11244	1.0	139
PMP-6852	PAC SUMP PUMP	120	1/2	HP	CONSTANT SPEED	11312J	60	10
PMP-6911	PEA FILTER AID SMALL FEED PUMP 1	120	1/4	KVA	VARIABLE SPEED	11245	24	139
PMP-6916	PEA FILTER AID SMALL FEED PUMP 2	120	1/4	KVA	VARIABLE SPEED	11245	24	139
PMP-6921	PEA FILTER AID LARGE FEED PUMP 1	480	2	HP	VARIABLE SPEED	11244	0.8	139
PMP-6926	PEA FILTER AID LARGE FEED PUMP 2	480	2	HP	VARIABLE SPEED	11244	0.8	139
PMP-6931	PEA FLOC AID FEED PUMP 1	480	2	HP	VARIABLE SPEED	11244	3.0	139
PMP-6936	PEA FLOC AID FEED PUMP 2	480	2	HP	VARIABLE SPEED	11244	3.0	139
PMP-6941	PEA FLOC AID FEED PUMP 3	480	2	HP	VARIABLE SPEED	11244	3.0	139
PMP-6946	PEA FLOC AID FEED PUMP 4	480	2	HP	VARIABLE SPEED	11244	3.0	139
PMP-6951	PEA STANDBY FEED PUMP	480	2	HP	VARIABLE SPEED	11244	3.0	139
PMP-6956	PEA FILTER AID DOSING PUMP	120	1/4	KVA	VARIABLE SPEED	11245	16	139
PMP-7103	PEC TRANSFER PUMP 1	480	3/4	HP	CONSTANT SPEED	11312S	28	56
PMP-7104	PEC TRANSFER PUMP 2	480	3/4	HP	CONSTANT SPEED	11312S	28	56

MISC. EQUIPMENT SCHEDULE

EQUIPMENT TAG	P&ID DWG.	DESCRIPTION	SPECIFICATION	COMMENTS
CHL-6331	63N07	FINISHED WATER CHLORINATOR 1	11260	
CHL-6332	63N07	FINISHED WATER CHLORINATOR 2	11260	
CHL-6333	63N07	FINISHED WATER CHLORINATOR 3	11260	
CHL-6334	63N08	RAW WATER CHLORINATOR 1	11260	
CHL-6335	63N08	RAW WATER CHLORINATOR 2	11260	
CHL-6336	63N08	RAW WATER CHLORINATOR 3	11260	
EDU-6341	63N09	FINISHED WATER EDUCTOR 1	11260	
EDU-6342	63N09	FINISHED WATER EDUCTOR 2	11260	
EDU-6346	63N09	FINISHED WATER EDUCTOR 3	11260	
EDU-6343	63N10	RAW WATER EDUCTOR 1	11260	
EDU-6344	63N10	RAW WATER EDUCTOR 2	11260	
EDU-6345	63N10	RAW WATER EDUCTOR 2	11260	
TNK-6391	63N14	CHLORINE SCRUBBER	11265	
-	65N03	DUAL TANK WATER SOFTENER	15400	
-	68N01	PAC FEED SYSTEM 1	13270	
-	68N04	PAC FEED SYSTEM 2	13270	
-	69N01	PEA FEED SYSTEM 1	11256	
-	69N02	PEA FEED SYSTEM 2	11256	

REV	DATE	BY	DESCRIPTION
△2	06/02/2025	MLL	ADDENDUM NO. 5
△1	04/15/2025	MLL	ADDENDUM NO. 1

BID SET

DESIGNED SB
DRAWN RB
CHECKED RB
DATE FEBRUARY 2025

REGISTERED PROFESSIONAL ENGINEER No. 12149234-2202 STETSON SKY BASSETT STATE OF UTAH

carollo®

JORDAN VALLEY WATER CONSERVANCY DISTRICT

JORDAN VALLEY WATER TREATMENT PLANT
FILTER AND CHEMICAL FEED UPGRADES
GENERAL
EQUIPMENT SCHEDULE 2

VERIFY SCALES
BAR IS ONE INCH ON ORIGINAL DRAWING
0 1"
IF NOT ONE INCH ON THIS SHEET, ADJUST SCALES ACCORDINGLY

JOB NO. 202001.10
DRAWING NO. 00G14
SHEET NO.
OF

LAST SAVED BY: sfields

PROJECT NO. 202001-100000 FILE NAME: 20200100G14.dwg

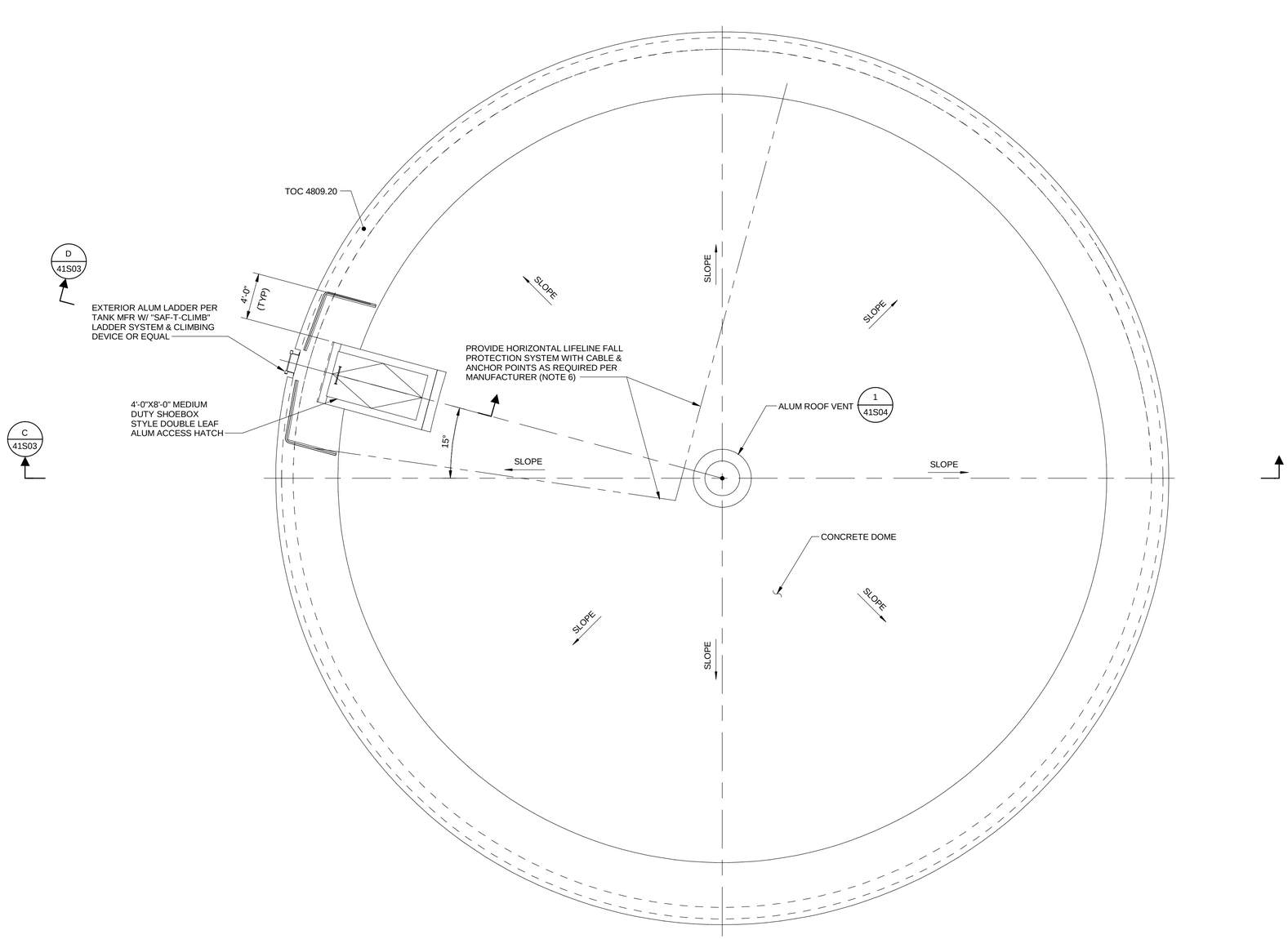

B **PLAN**
SCALE: 3/16" = 1'-0"

GENERAL NOTES:

1. FOR GENERAL STRUCTURAL NOTES SEE DRAWINGS 00GS01 AND 00GS02.
2. FOR THE TANK DESIGN CRITERIA SEE DRAWING 41S03.
3. THE TANK SHALL BE AN AWWA D110, TYPE I, STRAND WOUND, PRESTRESSED CONCRETE TANK DESIGNED AND CONSTRUCTED BY QUALIFIED TANK CONTRACTOR IN ACCORDANCE WITH THE REQUIREMENTS SET FOR IN SPECIFICATION 13207.
4. DRAWINGS SHOW THE GENERAL ARRANGEMENT FOR AWWA D110, TYPE I TANK. DETAILED ASPECTS OF THE TANK, INCLUDING SHOTCRETE, WATERSTOPS, BEARING PADS, REINFORCING STEEL, PRESTRESSING CONNECTIONS, SEISMIC CABLES, JOINTS, ETC ARE NOT SHOWN.
5. ALL STAINLESS STEEL SHALL BE A MINIMUM OF 316/316L FOR WELDING FABRICATIONS UNLESS NOTED OTHERWISE.
6. THE HORIZONTAL LIFELINE FALL PROTECTION SYSTEM SHALL BE COMPRISED OF COMPONENTS MANUFACTURED BY DBI-SALA FOR THE SAFE LINE SYSTEM, THE INSTALLED SYSTEM AND ALL ASSOCIATED COMPONENTS SHALL MEET ALL APPLICABLE OSHA SAFETY REGULATIONS.

SUBMERGED

1

REV	DATE	BY	DESCRIPTION
1	06/02/2025	MLL	ADDENDUM NO. 5

BID SET

DESIGNED SS
DRAWN TJD
CHECKED JAD
DATE FEBRUARY 2025

REGISTERED PROFESSIONAL ENGINEER
No. 11390122-2202
J. MATTHEW YATES
STATE OF UTAH

carollo®

JORDAN VALLEY WATER CONSERVANCY DISTRICT

JORDAN VALLEY WATER TREATMENT PLANT
FILTER AND CHEMICAL FEED UPGRADES
STRUCTURAL
BACKWASH TANK
UPPER PLAN

VERIFY SCALES
BAR IS ONE INCH ON ORIGINAL DRAWING
0 1"
IF NOT ONE INCH ON THIS SHEET, ADJUST SCALES ACCORDINGLY

JOB NO. 202001.10
DRAWING NO. 41S02
SHEET NO.
OF

PLOT DATE: 2/12/2025 2:17:50 PM

FILE NAME: Autodesk Docs://JVWCD 202001-100000 JVWTP Upgrades/20200141S0801.rvt

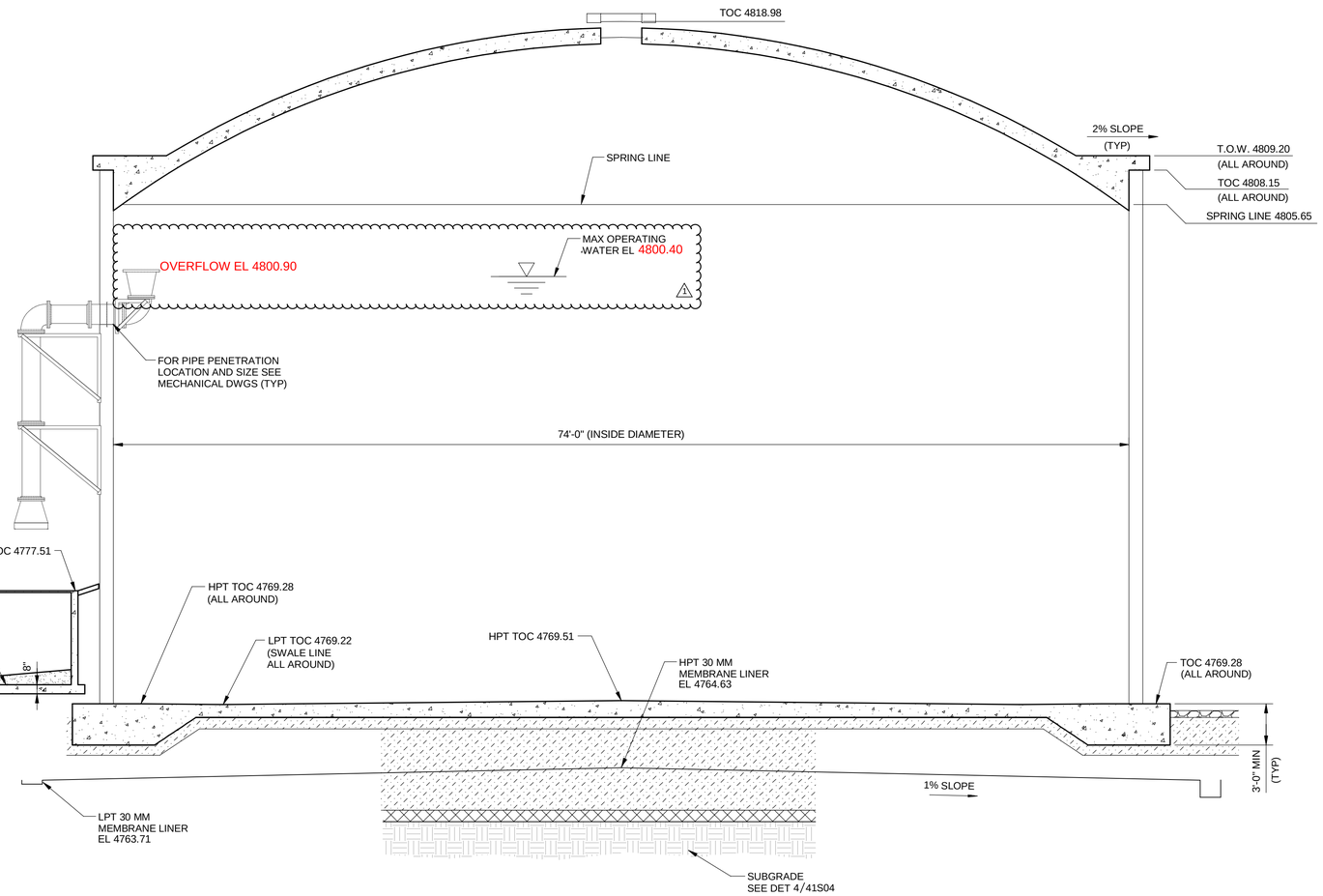

C SECTION
41S01
SCALE: 3/16" = 1'-0"

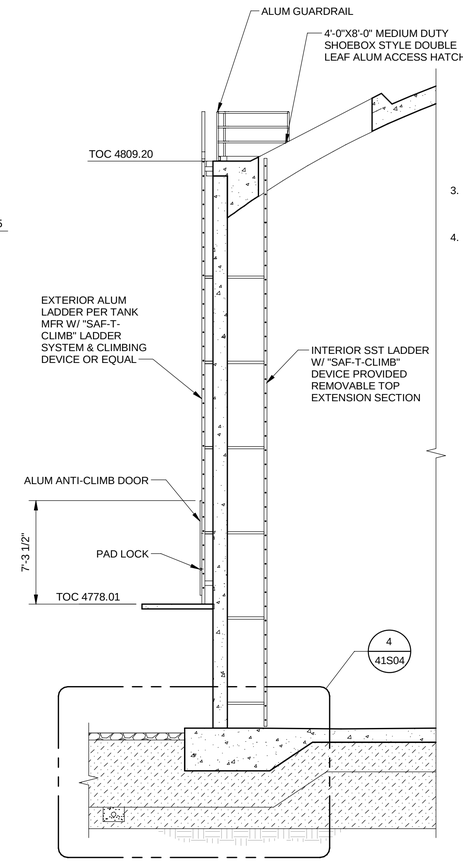

D SECTION
41S01
SCALE: 3/16" = 1'-0"

GENERAL NOTES:

1. FOR GENERAL STRUCTURAL NOTES SEE DRAWINGS 00GS01 AND 00GS02.
2. THE TANK DESIGN SHALL, AS A MINIMUM, MEET THE FOLLOWING STRUCTURAL DESIGN CRITERIA PER 2021 INTERNATIONAL BUILDING CODE ("IBC 2021") WITH ASCE 7-16. FOR ADDITIONAL DESIGN CRITERIA SEE DRAWING 00GS01 AND SPECIFICATION 13207.
   - A. STRUCTURE RISK CATEGORY:
     1. RISK CATEGORY IV.
   - B. LIVE LOADS:
     1. ROOF LIVE LOADS = 40 PSF (NON-REDUCIBLE WITH 300 LBS CONCENTRATED LOAD.
   - C. SNOW LOAD DATA:
     1. UNIFORM FLAT ROOF SNOW LOAD, P_F = 38 PSF.
        - i. THERMAL FACTOR, C_T = 1.2 (UNHEATED ROOF).
        - ii. ROOF SLOPE FACTOR, C_S = VARIES (OTHER SURFACES).
        - iii. PROVIDE BALANCED AND UNBALANCED SNOW LOAD DESIGN.
        - iv. PROVIDE SNOW DRIFT LOAD DESIGN.
   - D. SEISMIC DESIGN DATA:
     1. IMPORTANCE FACTOR, I_E = 1.50.
     2. NON-BUILDING STRUCTURE
        - i. BASIC SEISMIC FORCE RESISTING SYSTEM PER ACI 350.3.-20: SEE TANK DESIGN.
        - ii. IMPULSIVE RESPONSE COEFFICIENT, S_{AI} = 0.937g.
        - iii. CONVECTIVE RESPONSE COEFFICIENT, S_{AC} = 0.122g.
        - iv. LONG-PERIOD TRANSITION PERIOD, T_L = 8 SEC.
        - v. RESPONSE MODIFICATION FACTOR, R_I = SEE TANK DESIGN.
        - vi. RESPONSE MODIFICATION FACTOR, R_C = SEE TANK DESIGN.
        - vii. DESIGN BASE SHEAR, V = SEE TANK DESIGN.
   - E. GEOTECHNICAL DESIGN DATA:
     1. ALLOWABLE BEARING PRESSURE = [redacted]000 PSF. 1
3. INSPECTION OF REBAR BY ENGINEER REQUIRED PRIOR TO PLACEMENT OF CONCRETE FOR PIPE ENCASEMENT. VERIFY MINIMUM CONCRETE COVER AT TANK CONNECTION.
4. FOR WATERSTOP SEE DETAILS SD004/TYP AND SD008/TYP. WATERSTOP SHALL BE CONTINUOUS WITH CLOSED LOOP ALL AROUND JOINTS.

REV	DATE	BY	DESCRIPTION
1	06/03/2025	MLL	ADDENDUM NO. 5

BID SET

DESIGNED SS
DRAWN TJD
CHECKED JAD
DATE FEBRUARY 2025

REGISTERED PROFESSIONAL ENGINEER No. 11390122-2202 J. MATTHEW YATES STATE OF UTAH

carollo®

JORDAN VALLEY WATER CONSERVANCY DISTRICT

JORDAN VALLEY WATER TREATMENT PLANT
FILTER AND CHEMICAL FEED UPGRADES
STRUCTURAL
BACKWASH TANK
SECTIONS AND DETAILS 1

VERIFY SCALES
BAR IS ONE INCH ON ORIGINAL DRAWING
0 1"
IF NOT ONE INCH ON THIS SHEET, ADJUST SCALES ACCORDINGLY

JOB NO. 202001.10
DRAWING NO. 41S03
SHEET NO.
OF

PLOT DATE: 2/12/2025 2:17:58 PM

FILE NAME: Autodesk Docs://JVWCD 202001-100000 JVWTP Upgrades/20200141S0801.rvt

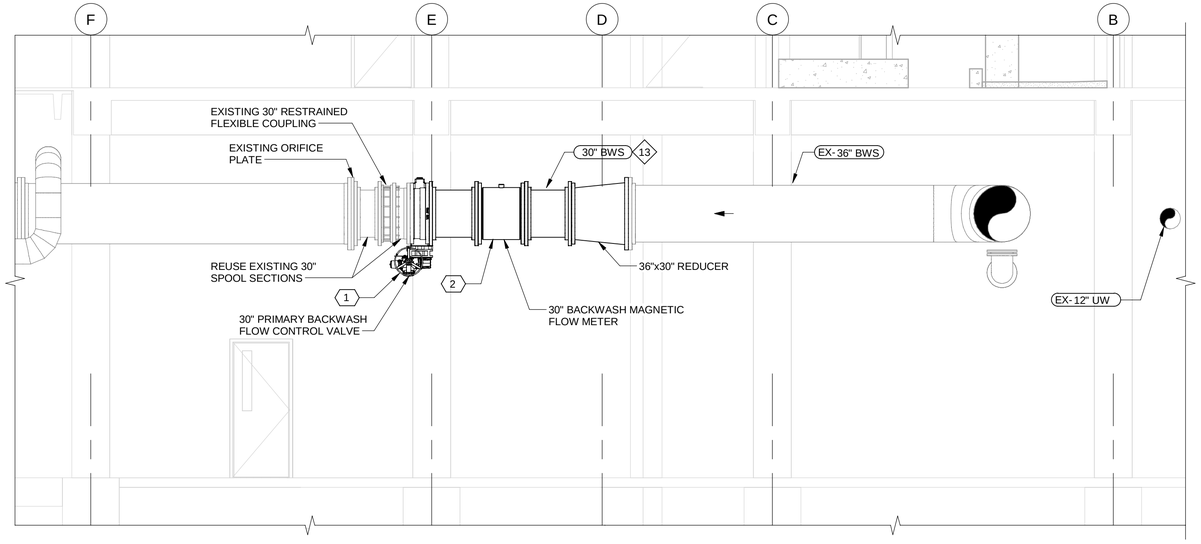

Y SECTION
30M01
SCALE: 1/4" = 1'-0"

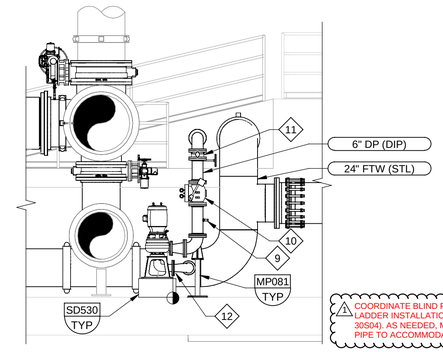

AC SECTION
30M03
SCALE: 1/4" = 1'-0"

COORDINATE BLIND FLANGE INSTALLATION WITH LADDER INSTALLATION (SEE SECTION S ON DRAWING 30S04). AS NEEDED, MODIFY ABANDONED EX-12" FTW PIPE TO ACCOMMODATE THE NEW LADDER.

GENERAL NOTES:

1. CONTRACTOR SHALL PROTECT EXISTING PIPING IN PLACE.
2. FIELD VERIFICATION OF EXISTING CONDITIONS IS REQUIRED FOR FILTER PIPING. TUNNELING WORK TO BE COMPLETED PRIOR TO COMPLETING SHOW DRAWINGS FOR FTW PIPING. SEE SPECIFICATION SECTION 01140 WORK RESTRICTIONS.

KEY NOTES:

1. REPLACE EXISTING VENTURI METER WITH NEW MAGNETIC FLOW METER. INSTALL PIPE SPOOL BETWEEN METER AND EXISTING FLANGE WITH A RESTRAINED FLEXIBLE COUPLING.
2. CONNECT 6" DP AT CENTERLINE OF 24" FTW.
3. OPENING IN WALL FOR TUNNELING FOR 24" FTW PIPE. DIMENSIONS TO BE DETERMINED BY CONTRACTOR AND SUBMITTED AS PART OF THE DELEGATED DESIGN FOR TUNNELING ACTIVITIES. SEE STRUCTURAL DRAWINGS FOR FINAL REPAIR REQUIREMENTS.
4. FLOOR PIT TO BE ESTABLISHED FOR TUNNELING FOR 24" FTW PIPE. DIMENSION TO BE DETERMINED BY CONTRACTOR AND SUBMITTED AS PART OF THE DELEGATED DESIGN FOR TUNNELING ACTIVITIES. SEE STRUCTURAL DRAWINGS FOR FINAL REPAIR REQUIREMENTS.
5. TUNNEL NEW 24" FTW PIPE UNDER EXISTING SLAB. BACKFILL USING CLSM PER SPECIFICATION SECTION 02312.
6. EXISTING ELECTRICAL CONDUITS HAVE BEEN IDENTIFIED IN OLD PHOTOS AT THIS LOCATION. SEE 30M11. PROTECT IN PLACE DURING TUNNELING ACTIVITIES.
7. PROTECT IN PLACE UNTIL NEW 24" FTW IS IN SERVICE. SEE WORK RESTRICTIONS. PIPE TO BE ABANDONED AFTER NEW FTW IS IN SERVICE.
8. REMOVE EXISTING GROOVED COUPLING ON 12" FTW. WELD ON FLANGE AND INSTALL BLIND FLANGE ON EXISTING 12" FTW. TYPICAL OF TWO LOCATIONS IN FILTER GALLERY.
9. 3/4" NPT FEMALE CONNECTION FOR FLOW SWITCH, TYPICAL OF EACH FILTER DRAIN PUMP.
10. INSTALL SWING CHECK VALVE, TYPICAL OF EACH FILTER DRAIN PUMP.
11. INSTALL MANUAL BUTTERFLY VALVE, TYPICAL OF EACH FILTER DRAIN PUMP.
12. INSTALL INSULATING FLANGE PER DETAIL 11 ON DRAWING 00CP02.
13. CONTRACTOR SHALL REUSE EXISTING OVERHEAD ROD AND ANGLE PIPE SUPPORTS ON NEW 30" BWS PIPING.

KEY TAGS:

#		
1	VAL-4041	MASTER BACKWASH SUPPLY VALVE
2	FE-4041	BACKWASH SUPPLY FLOW METER
3	FE-4136	BACKWASH FILL MAGNETIC FLOW METER

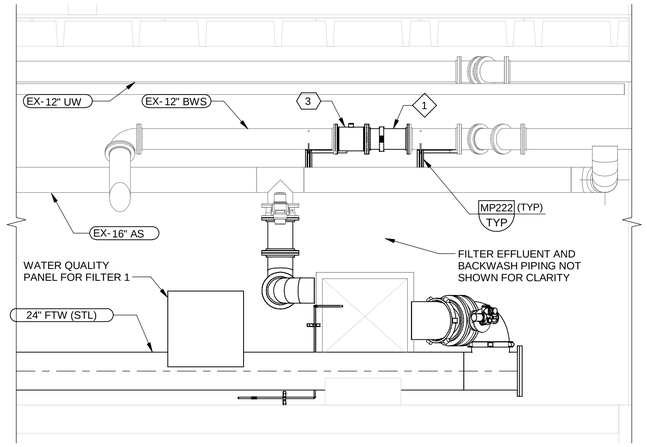

Z SECTION
30M04
SCALE: 1/4" = 1'-0"

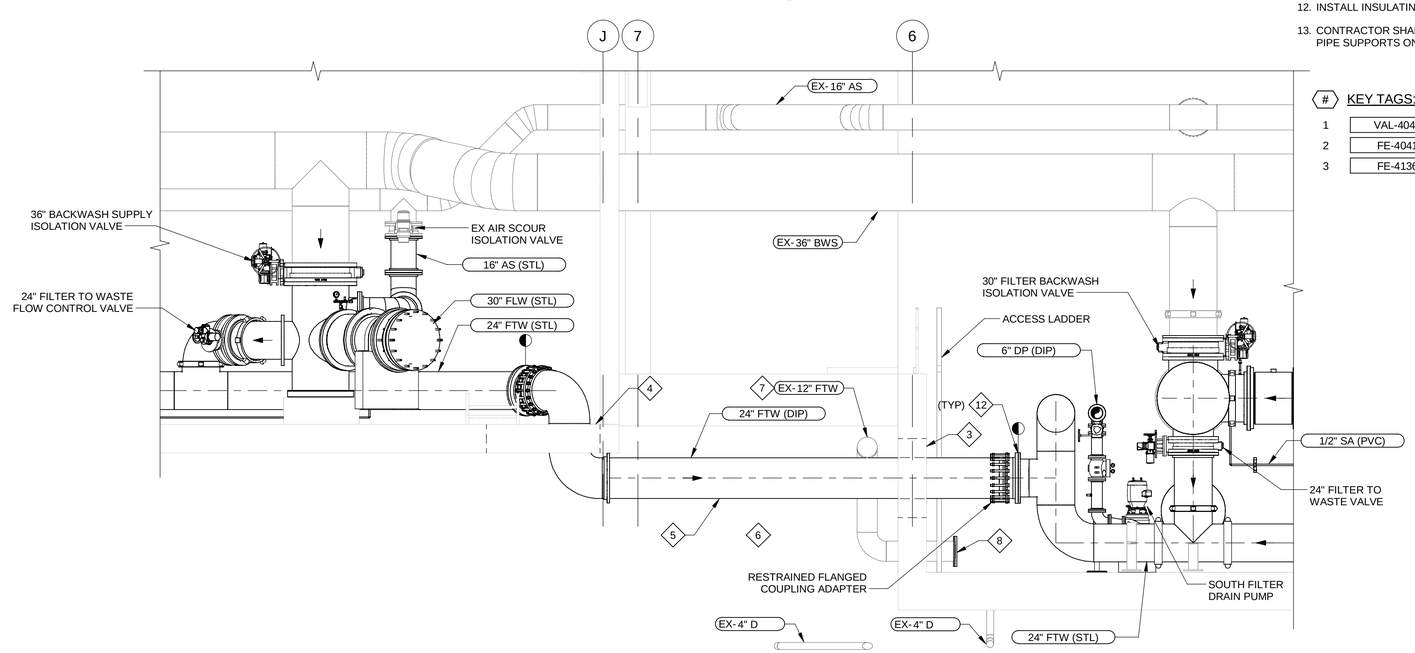

AA SECTION
30M03
SCALE: 1/4" = 1'-0"

REV	DATE	BY	DESCRIPTION
1	05/30/2025	BRB	ADDENDUM NO. 5

BID SET

DESIGNED BB
DRAWN RPW
CHECKED Checker
DATE FEBRUARY 2025

REGISTERED PROFESSIONAL ENGINEER No. 12294472-2202 BRADLEY R. BUSWELL STATE OF UTAH

carollo®

JORDAN VALLEY WATER CONSERVANCY DISTRICT

JORDAN VALLEY WATER TREATMENT PLANT
FILTER AND CHEMICAL FEED UPGRADES
MECHANICAL
FILTERS
SECTIONS AND DETAILS 6

VERIFY SCALES
BAR IS ONE INCH ON ORIGINAL DRAWING
0 1"
IF NOT ONE INCH ON THIS SHEET, ADJUST SCALES ACCORDINGLY

JOB NO. 202001.10
DRAWING NO. 30M16
SHEET NO.
OF

PLOT DATE: 2/10/2025 4:01:44 PM

FILE NAME: Autodesk Docs://JVWCD 202001-100000 JVWTP Upgrades/20200130M0801.rvt

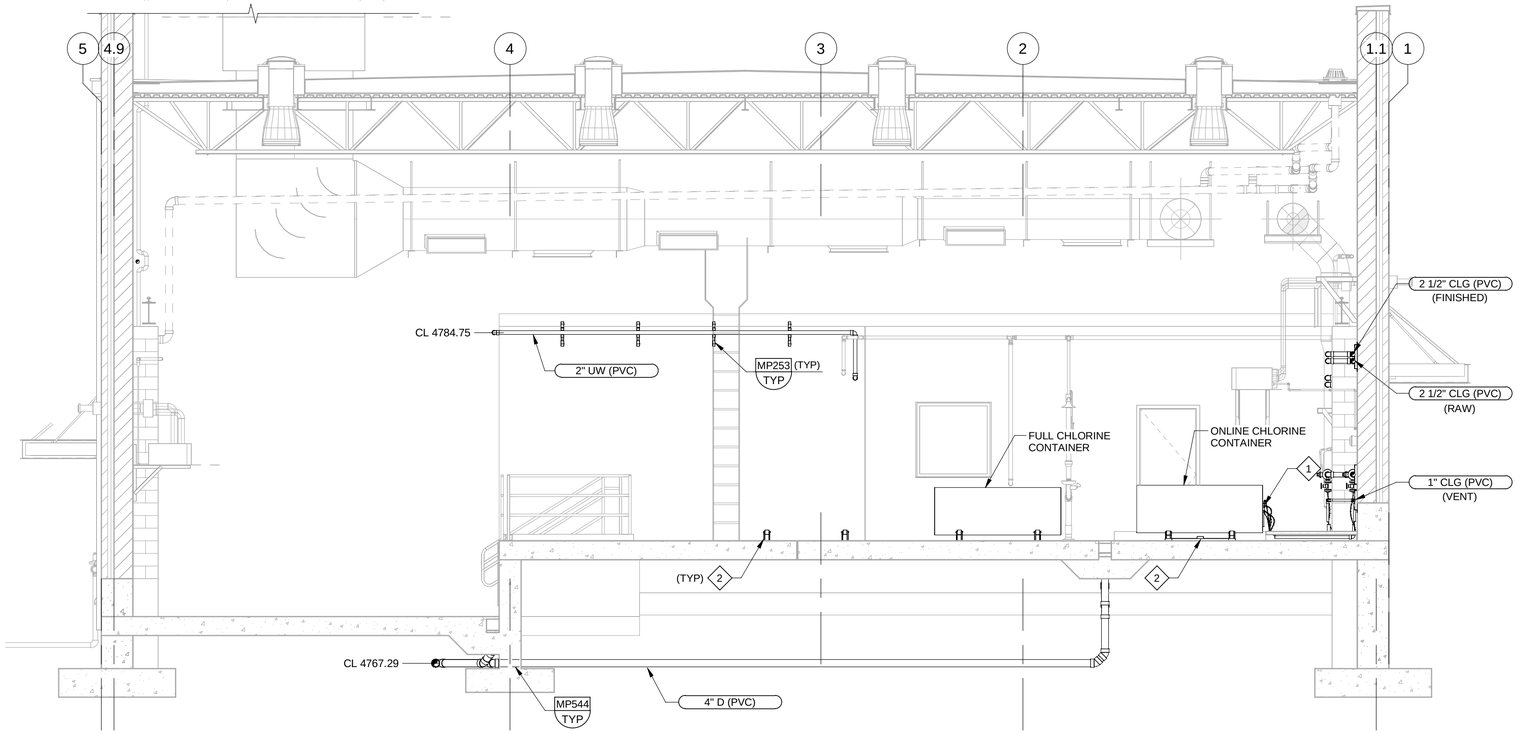

B SECTION
63M01
SCALE: 1/4" = 1'-0"

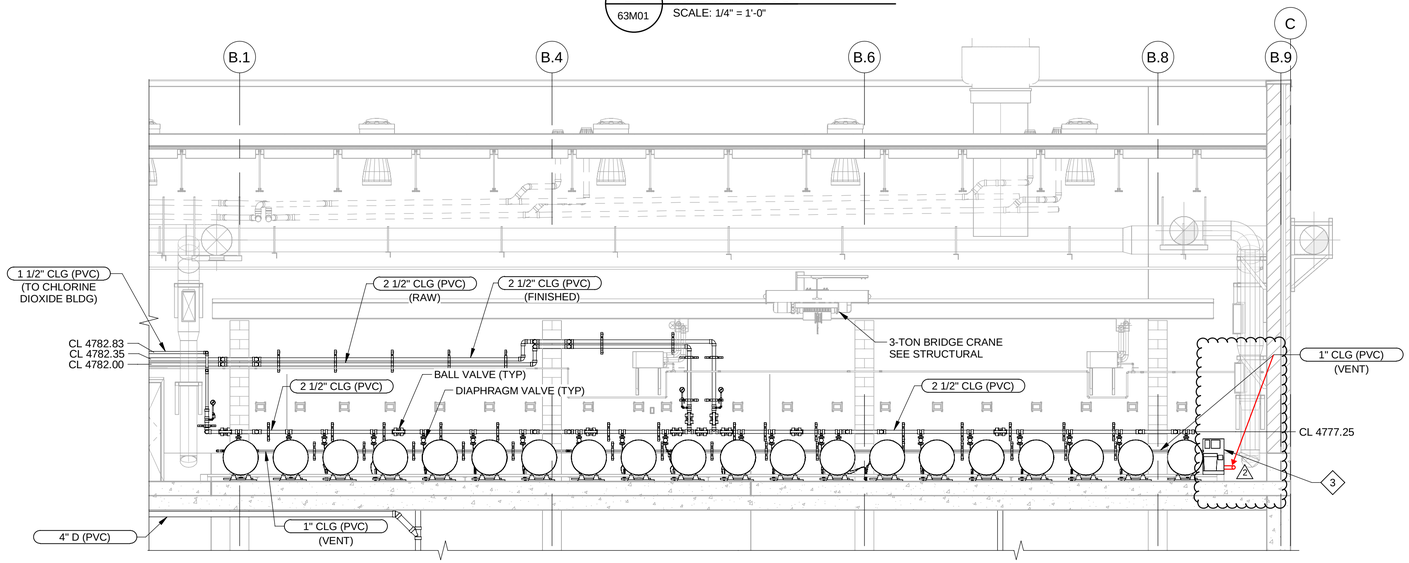

C SECTION
63M01
SCALE: 3/16" = 1'-0"

GENERAL NOTES:

1. CONCRETE ENCASE ALL BURIED PIPING LOCATED BENEATH THE ZONE OF INFLUENCE OF THE STRUCTURE PER TYPICAL DETAIL MP003/TYP.
2. NOT ALL REQUIRED VALVES, INSTRUMENTS, AND DRAINS ARE SHOWN. SEE P&ID DRAWINGS.
3. ALL PIPING SUPPORT SYSTEMS SHALL BE DESIGNED AND DETAILED BY THE CONTRACTOR. ALL CALCULATIONS AND DETAILS SHALL BE STAMPED AND SIGNED BY A REGISTERED ENGINEER IN THE STATE OF UTAH.

KEY NOTES:

1. VACUUM REGULATOR AND EMERGENCY SHUTOFF VALVE MOUNTED DIRECTLY TO THE CHLORINE CONTAINER. SEE SPECIFICATION SECTION 11260 - GASEOUS CHLORINATION SYSTEM.
2. CHLORINE STORAGE TRUNNIONS AND WEIGHT SCALES TO BE PROVIDED BY MANUFACTURER. SEE SPECIFICATION SECTION 11260 - GASEOUS CHLORINATION SYSTEM. DRILL AND EPOXY ANCHORS PER MANUFACTURER REQUIREMENTS.
3. ROUTE 1" VENT LINE FROM THE RAW WATER CONTAINERS AND FINISHED WATER CONTAINERS TO THE PASSIVE CHLORINE GAS ARRESTOR. SEE SPECIFICATION SECTION 11260 - GASEOUS CHLORINATION SYSTEM FOR DETAILS. ~~INSTALL #14 SCREEN ON THE OUTLET OF THE VENT LINE.~~ 1
   ROUTE OUTLET PIPE FROM PASSIVE CHLORINE GAS ARRESTOR THROUGH THE WALL PER DETAIL MP544 AND INSTALL A #14 SCREEN ON THE OUTLET OF THE VENT LINE. 2

REV	DATE	BY	DESCRIPTION
			BID SET
2	06/03/2025	SSB	ADDENDUM NO. 5
1	05/20/2025	SSB	ADDENDUM NO. 4

DESIGNED SSB
DRAWN RPW
CHECKED ARL
DATE FEBRUARY 2025

REGISTERED PROFESSIONAL ENGINEER
No. 12149234-2202
STETSON SKY BASSETT
STATE OF UTAH

carollo®

JORDAN VALLEY WATER CONSERVANCY DISTRICT

JORDAN VALLEY WATER TREATMENT PLANT
FILTER AND CHEMICAL FEED UPGRADES
MECHANICAL
CHLORINE BUILDING
SECTIONS 1

VERIFY SCALES
BAR IS ONE INCH ON ORIGINAL DRAWING
0 1"
IF NOT ONE INCH ON THIS SHEET, ADJUST SCALES ACCORDINGLY

JOB NO. 202001.10
DRAWING NO. 63M03
SHEET NO. OF

PLOT DATE: 2/10/2025 4:02:07 PM

FILE NAME: Autodesk Docs://JVWCD 202001-100000 JVWTP Upgrades/20200163M0801.rvt

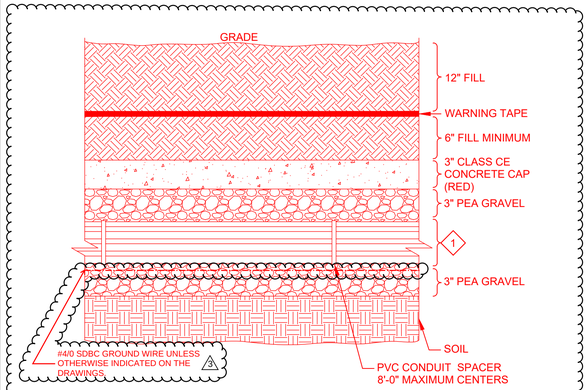

GENERAL NOTES:

1. ALL DIMENSIONS ARE MINIMUM UNLESS OTHERWISE INDICATED ON THE DRAWINGS.
2. REFER TO THE SPECIFICATIONS FOR TRENCH BACKFILL REQUIREMENTS.
3. PROVIDE CONCRETE CAP ON ALL DUCT BANKS UNLESS OTHERWISE INDICATED ON THE DRAWINGS.
4. REFER TO THE SPECIFICATIONS FOR MATERIAL REQUIREMENTS.
5. BOND THE DUCT BANK GROUND WIRE TO THE GROUNDING SYSTEM AT BOTH ENDS OF THE DUCT BANK. 3 1

KEY NOTES:

1. REFER TO DUCT BANK AND CONDUIT SCHEDULES FOR CONDUIT REQUIREMENTS.

EM015 TYP — PEA GRAVEL EMBEDDED DUCT BANK

R 01/23/25

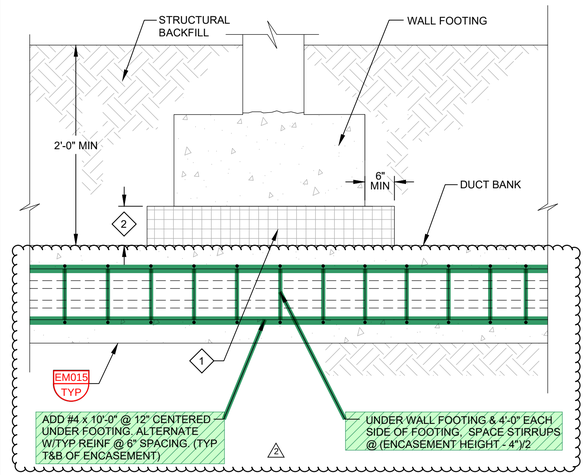

KEY NOTES:

1. EXPANDED POLYPROPYLENE OR SIMILAR ENERGY ABSORBING COMPRESSIBLE MATERIAL.
2. REFER TO SPECIFICATIONS FOR REQUIRED MINIMUM DISTANCE BETWEEN TOP OF DUCT BANK AND BOTTOM FOOTER.

EM021 TYP — DUCT BANK CROSSING UNDER FOOTER

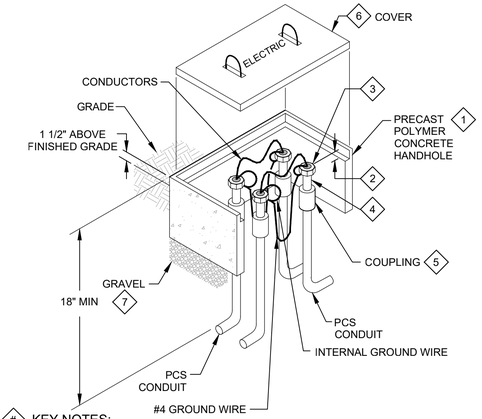

KEY NOTES:

1. PRECAST POLYMER CONCRETE HANDHOLE WITH OPEN BOTTOM FOR DRAINAGE. DO NOT INSTALL POLYMER CONCRETE HANDHOLES IN ROADWAYS.
2. ALLOW SUFFICIENT SPACE BETWEEN THE CONDUIT AND HANDHOLE LID FOR BENDING RADIUS OF WIRES AND CABLES.
3. INSULATED GROUNDING BUSHINGS. BOND BUSHINGS TO EACH OTHER WITH #4 WIRE AND TO GROUND CONDUCTORS IN EACH CONDUIT.
4. NIPPLE (USED TO COMPACT DUCT SEAL IN COUPLING).
5. PACK COUPLING AREA WITH DUCT SEAL BY MANVILLE OR APPROVED EQUAL.
6. PROVIDE "TIER"-RATED COVER PER MANHOLE AND HANDHOLE SCHEDULE.
7. GRAVEL BED FOR LEVELING & DRAINAGE. MINIMUM 12" DEEP & EXTENDING AT LEAST 6" EACH WAY PAST OUTSIDE LIMITS OF HANDHOLE.

EM052 TYP — ELECTRICAL HANDHOLE: PRECAST POLYMER CONCRETE

S

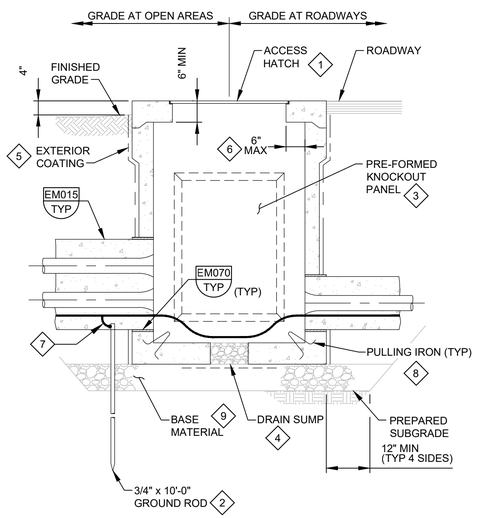

GENERAL NOTES:

1. PROVIDE MINIMUM INTERIOR DIMENSIONS AS SHOWN IN THE ELECTRICAL HANDHOLE AND MANHOLE SCHEDULE.
2. BOND ALL METALLIC ITEMS INSIDE HANDHOLE TO GROUND ROD USING #4 AWG BARE COPPER CABLE.
3. SEE DRAWINGS FOR ORIENTATION, NUMBER, AND SIZE OF DUCT BANKS AT EACH HANDHOLE.

KEY NOTES:

1. SEE THE MANHOLE AND HANDHOLE SCHEDULE FOR REQUIRED LOAD RATING OF HATCH.
2. BOND DUCT BANK GROUND CABLE TO GROUND ROD. REFER TO THE SPECIFICATIONS FOR CONNECTION REQUIREMENTS.
3. INSTALL DUCT BANKS ONLY THROUGH CAST-IN OPENINGS OR PREFORMED KNOCKOUT PANELS. PROVIDE KNOCKOUTS ON EACH WALL AROUND HANDHOLE.
4. PROVIDE MINIMUM 4 INCH DIAMETER, GRAVEL FILLED PENETRATION THROUGH FLOOR OF HANDHOLE. SET SUMP OPENING OVER MINIMUM 18" SQUARE FILTER FABRIC TO ISOLATE GRAVEL FROM BASE MATERIAL BELOW.
5. COAT EXTERIOR WALLS BELOW GRADE WITH BITUMINOUS DAMP PROOFING.
6. MAXIMUM TOP SLAB OVERHANG IS TYPICAL AROUND 4 SIDES OF HANDHOLE.
7. GROUNDING CABLE CONNECTION. REFER TO THE SPECIFICATIONS FOR CONNECTION REQUIREMENTS.
8. PROVIDE ONE PULLING IRON ON EACH WALL OF HANDHOLE.
9. BASE MATERIAL: PROVIDE MIN 12" COMPACTED AGGREGATE BASE COURSE.

EM056 TYP — ELECTRICAL HANDHOLE PRECAST CONCRETE W/HATCH

R 01/23/25

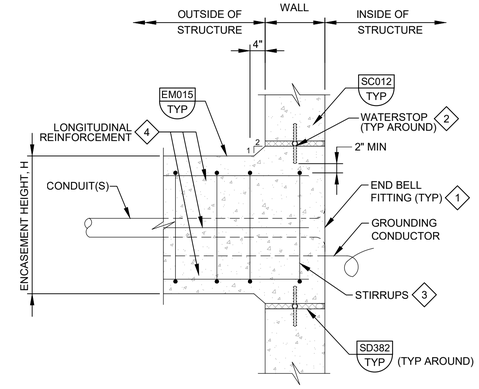

KEY NOTES:

1. PROVIDE GROUNDING FITTING FOR METALLIC CONDUITS ENTERING MANHOLE. BOND GROUNDING FITTING TO DUCTBANK GROUNDING CONDUCTOR.
2. 6" PVC CENTERBULB WATERSTOP TYPICAL AROUND PERIMETER OF ENCASEMENT.
3. FOR FIRST 12'-0" FROM INSIDE FACE OF STRUCTURE, STIRRUP SPACING, IN INCHES = (H-4)/2, WHERE H = CONCRETE ENCASEMENT HEIGHT IN INCHES.
4. ADDITIONAL #4 x 12'-0" @ 12" ON ALL FOUR FACES OF ENCASEMENT. ALTERNATE WITH TYPICAL REINFORCEMENT FOR 6" SPACING.

EM071 TYP — ENCASED CONDUITS AT MANHOLES OR STRUCTURES - WITH WATERSTOP

R 01/23/25

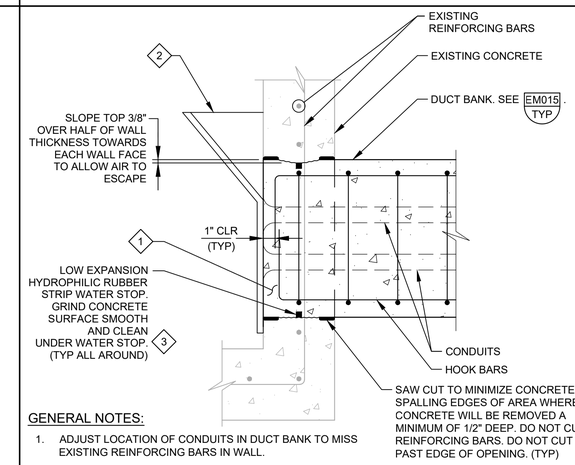

GENERAL NOTES:

1. ADJUST LOCATION OF CONDUITS IN DUCT BANK TO MISS EXISTING REINFORCING BARS IN WALL.
2. ROUGHEN CONCRETE TO 1/4" AMPLITUDE AND COAT WITH EPOXY RESIN/PORTLAND CEMENTS BONDING AGENT.

KEY NOTES:

1. REMOVE CONCRETE AS SHOWN FOR NEW DUCT BANK PENETRATION THROUGH WALL. DO NOT CUT EXISTING REINFORCING BARS.
2. USE THE "BIRDS BEAK" FORM FOR ACCESS FOR VIBRATOR AND TO ALLOW CONCRETE TO BE PLACED UNDER SLIGHT PRESSURE. AFTER FORMS ARE REMOVED, REMOVE PROJECTING CONCRETE AND FINISH TO MATCH FINISH OF EXISTING CONCRETE.
3. SIKA SWELLSTOP OR EQUAL. FOLLOW MANUFACTURER'S INSTALLATIONS DETAILS. MINIMUM 2" CONCRETE COVER ON EITHER SIDE.

EM072 TYP — DUCT BANK CONNECTION TO EXISTING HANDHOLE, PULL BOX, OR WALL

R 01/23/25

REV	DATE	BY	DESCRIPTION
3	05/30/2025	SKB	ADDENDUM NO. 5
2	05/08/2025	SKB	ADDENDUM NO. 4
1	04/30/2025	SKB	ADDENDUM NO. 2

BID SET

DESIGNED CE
DRAWN CE
CHECKED GCE
DATE FEBRUARY 2025

REGISTERED PROFESSIONAL ENGINEER No. 5329023 GUY C. EHLERS STATE OF UTAH

carollo®

JORDAN VALLEY WATER CONSERVANCY DISTRICT

JORDAN VALLEY WATER TREATMENT PLANT
FILTER AND CHEMICAL FEED UPGRADES
ELECTRICAL
TYPICAL DETAILS 4

VERIFY SCALES
BAR IS ONE INCH ON ORIGINAL DRAWING
0 1"
IF NOT ONE INCH ON THIS SHEET, ADJUST SCALES ACCORDINGLY

JOB NO. 202001.10
DRAWING NO. 00GE06
SHEET NO. OF

Plot Date: 9/12/2022 7:29:07 AM
LAST SAVED BY: jdbriones

PROJECT NO. 202001-100000 FILE NAME: 20200100GE06.dwg

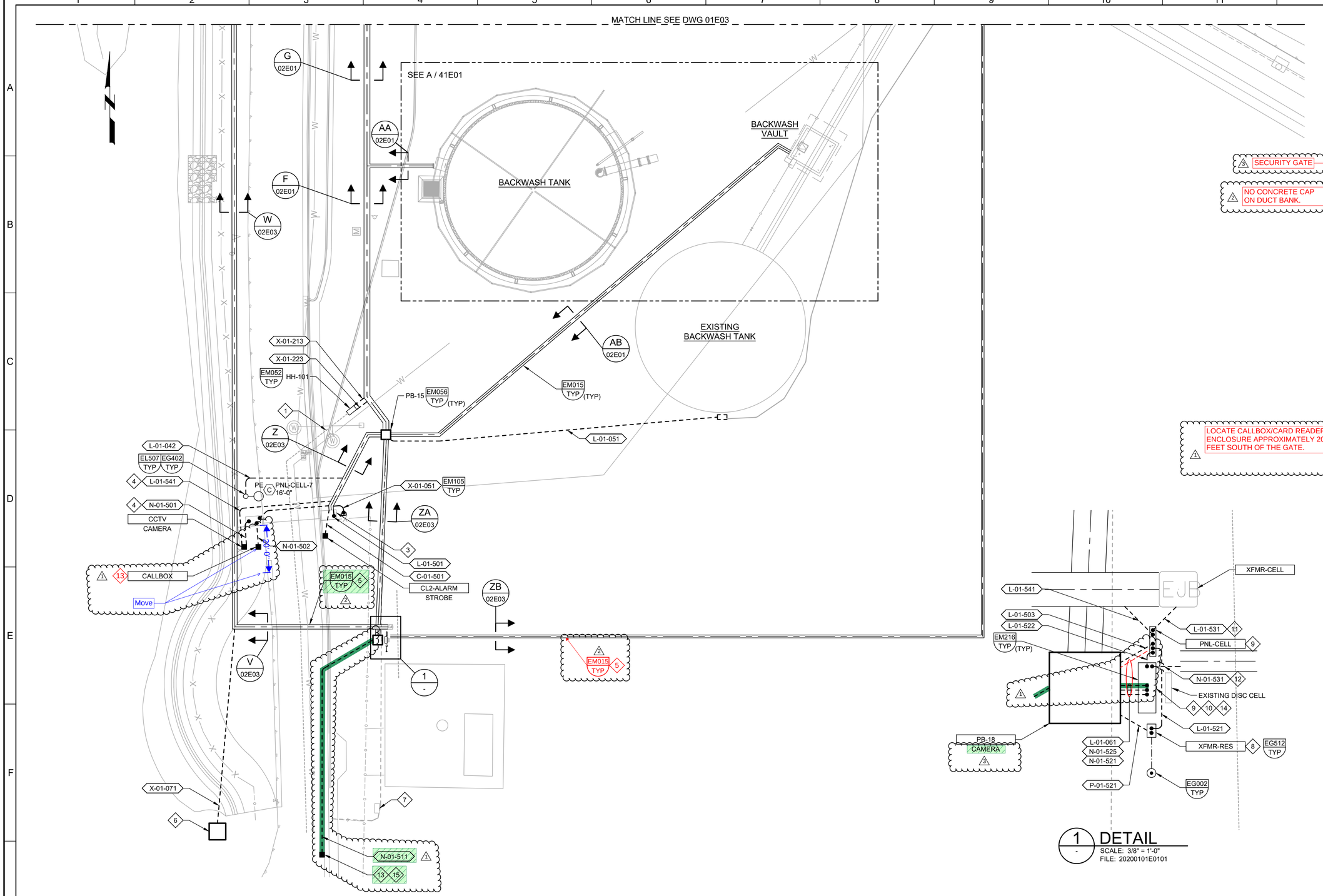

1 DETAIL
SCALE: 3/8" = 1'-0"
FILE: 20200101E0101

GENERAL NOTES:

1. SEE OVERALL SITE PLAN ON DRAWING 01E01.
2. SEE DRAWING 00DE01 FOR DEMOLITION IN THIS AREA.

KEY NOTES:

1. TWO ABANDONED 4-INCH CONDUITS. TERMINATE CONDUITS IN NEW HAND HOLE.
2. REROUTE TWO EXISTING CONDUITS WITH (3) #12 AWG CONDUCTORS FOR BACKWASH RESERVOIR LEVEL TRANSMITTER HEATER AND (1) 2/CS-#16 CABLE FOR LEVEL TRANSMITTER SIGNAL.
3. SOUTH SECURITY GATE, RELOCATED FROM EXISTING LOCATION. MODEL VPL-24, AG# AG8617, SERIAL NO. G-JA15-C03975. PROVIDE ALL NECESSARY CONDUIT AND WIRING TO MATCH EXISTING LOCATION.
4. STUB UP FOR SECURITY CAMERA, TO BE RELOCATED FROM EXISTING LOCATION.
5. PROVIDE CONCRETE CAP OVER DUCT BANK AS SHOWN IN THE TYPICAL DETAIL.
6. RELOCATE EXISTING PULL BOX FROM DRAWING 01DE01.
7. EXISTING PULL BOX FOR POWER AND FIBER OPTIC TO THE CULINARY RESERVOIR.
8. 3 KVA, 240V-480V, 1-PHASE, STEP UP TRANSFORMER FURNISHED BY OWNER, AND USED FOR TEMPORARY POWER TO THE CULINARY RESERVOIR.
9. PNL-CELL AND THE ELECTRONICS ENCLOSURE WILL BE PERMANENT. AT PROJECT COMPLETION, DISCONNECT POWER FROM XFMR-CELL TO PNL-CELL. RE-POWER PNL-CELL FROM PNL-CS IN THE CAUSTIC SODA BUILDING.
10. ELECTRONIC EQUIPMENT ENCLOSURE. 36 INCHES HIGH X 30 INCHES WIDE X 12 INCHES DEEP WITH BACK PANEL. RE-LOCATE ELECTRONIC EQUIPMENT FROM EXISTING GATE CONTROL BOX AND CHLORINE DIOXIDE RTU TO NEW ELECTRONICS ENCLOSURE AS SHOWN ON DRAWGS. INSTALL NEW POWER METER AND OTHER NEW ITEMS AS REQUIRED.
11. TEMPORARY POWER FOR PNL-CELL.
12. TEMPORARY FIBER OPTIC FOR ELECTRONICS ENCLOSURE. ABANDON FIBER OPTIC AFTER THE PERMANENT FIBER OPTIC CONNECTION IS MADE TO RTU-CS.
13. FIELD VERIFY LOCATION OF EXISTING GATE CARD READER.
14. ELECTRONICS ENCLOSURE.
15. GATE CARD READER.

Know what's below. Call 811 before you dig.
BLUE STAKES OF UTAH
UTILITY NOTIFICATION CENTER, INC.
www.bluestakes.org
1-800-662-4111

SCALE
0 10' 20' 40'
SCALE: 1" = 20'

REV	DATE	BY	DESCRIPTION
3	05/30/2025	SKB	ADDENDUM NO. 5
2	04/30/2025	SKB	ADDENDUM NO. 2
1	04/15/2025	SKB	ADDENDUM NO. 1

BID SET

DESIGNED SKB
DRAWN NKK
CHECKED GCE
DATE FEBRUARY 2025

REGISTERED PROFESSIONAL ENGINEER No. 5329023 GUY C. EHLERS STATE OF UTAH

carollo

JORDAN VALLEY WATER CONSERVANCY DISTRICT

JORDAN VALLEY WATER TREATMENT PLANT
FILTER AND CHEMICAL FEED UPGRADES
ELECTRICAL
ENLARGED SITE PLAN 1

VERIFY SCALES
BAR IS ONE INCH ON ORIGINAL DRAWING
0 1"
IF NOT ONE INCH ON THIS SHEET, ADJUST SCALES ACCORDINGLY

JOB NO. 202001.10
DRAWING NO. 01E02
SHEET NO.
OF

LAST SAVED BY: NKillian

PROJECT NO.
FILE NAME: 20200101E02.dwg

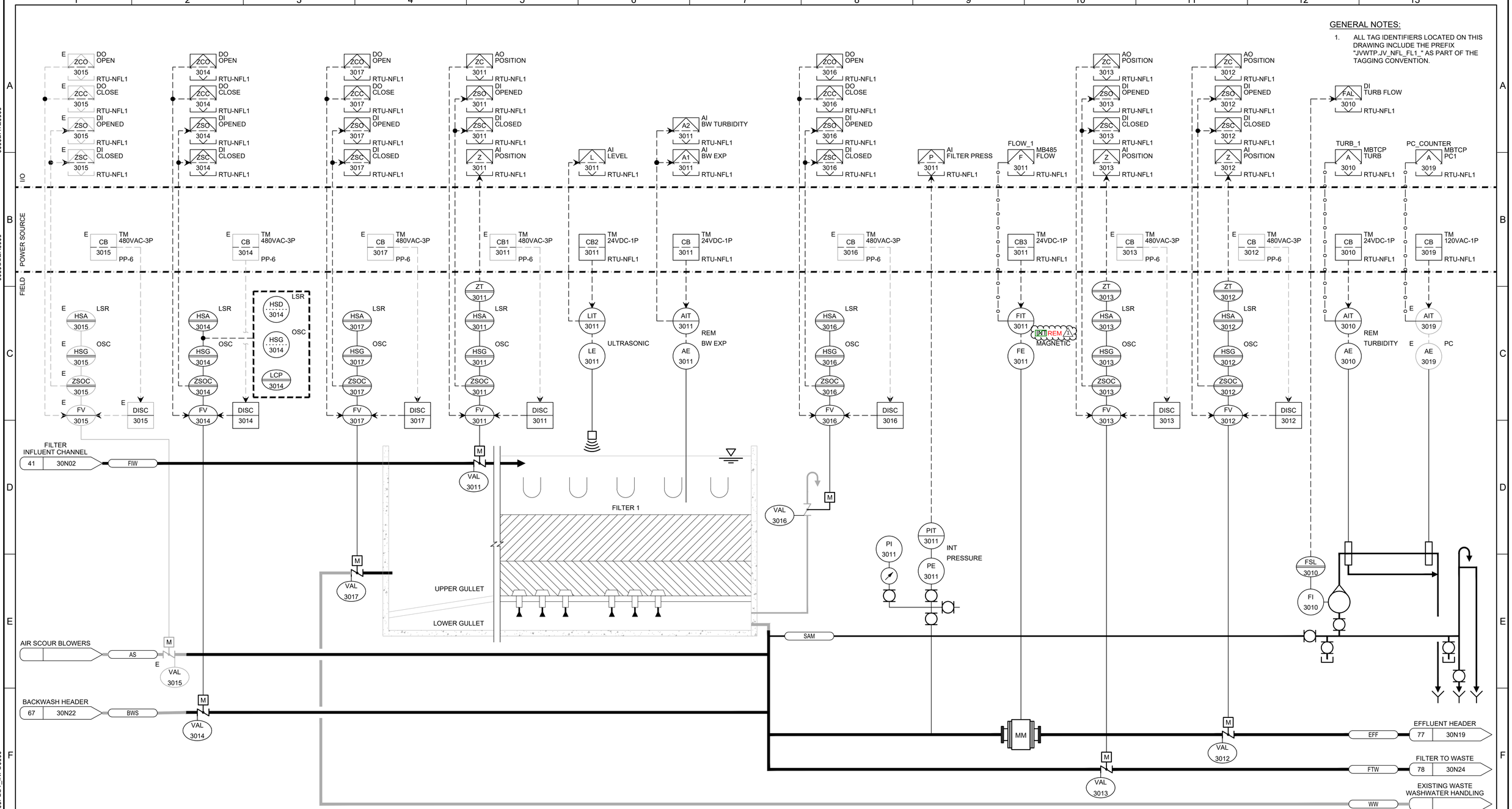

REV	DATE	BY	DESCRIPTION
1	06/03/2025	ERB	ADDENDUM NO. 5

BID SET

DESIGNED GEB
DRAWN DKI
CHECKED GCE
DATE FEBRUARY 2025

REGISTERED PROFESSIONAL ENGINEER No. 5329023 GUY C. EHLERS STATE OF UTAH

carollo

JORDAN VALLEY WATER CONSERVANCY DISTRICT

JORDAN VALLEY WATER TREATMENT PLANT

FILTER AND CHEMICAL FEED UPGRADES

INSTRUMENTATION

P&ID
FILTER 1

VERIFY SCALES
BAR IS ONE INCH ON ORIGINAL DRAWING
0 1"
IF NOT ONE INCH ON THIS SHEET, ADJUST SCALES ACCORDINGLY

JOB NO. 202001.10
DRAWING NO. 30N03
SHEET NO.
OF

$$$$DATE$$$$ $$$$USER$$$$ $$$$PLOT_INFO$$$$ LAST SAVED BY: LRivas

PROJECT NO. 202001-100000 FILE NAME: 20200130N03.dwg

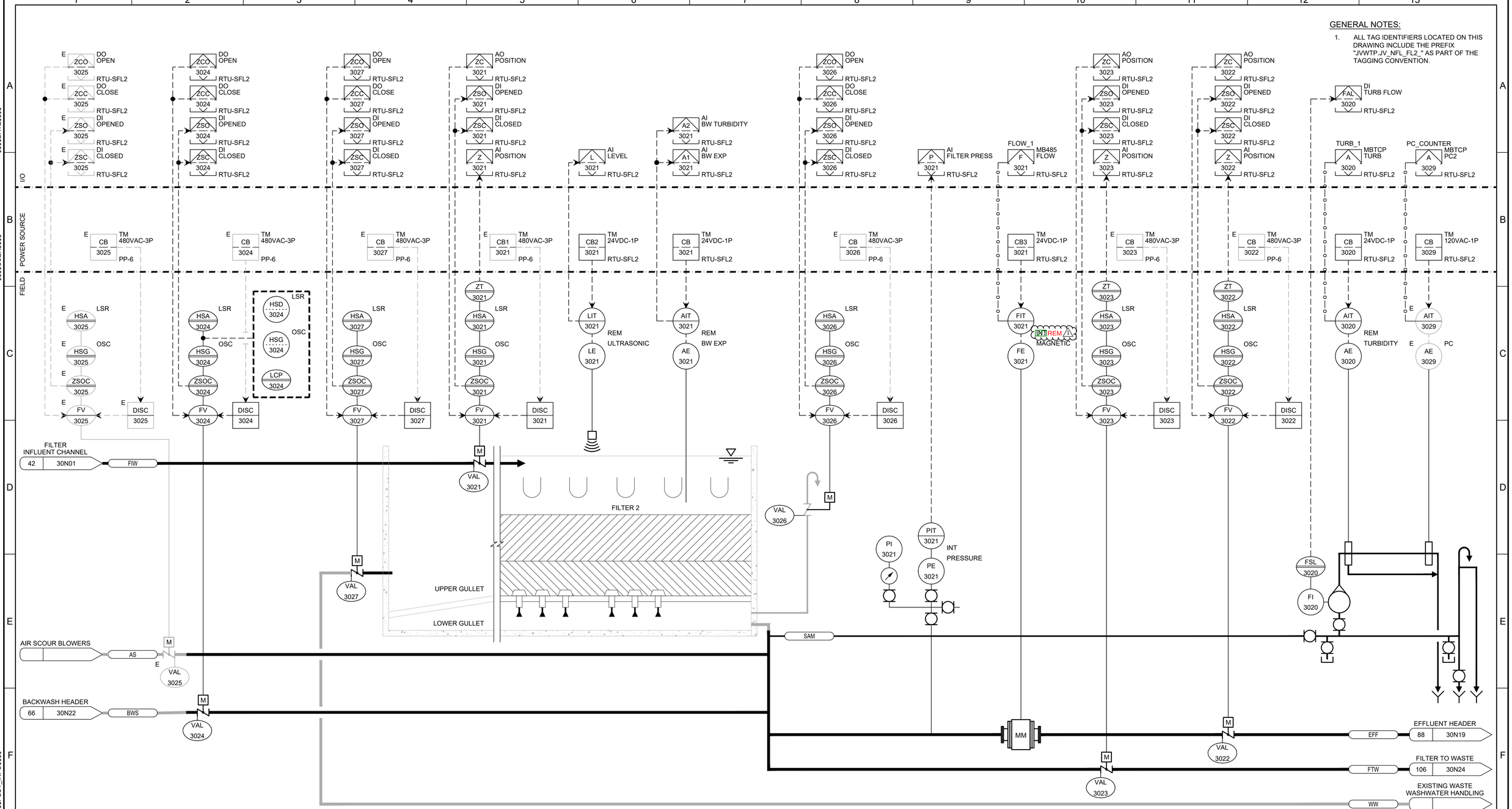

REV	DATE	BY	DESCRIPTION
1	06/03/2025	ERB	ADDENDUM NO. 5

BID SET

DESIGNED GEB
DRAWN DKI
CHECKED GCE
DATE FEBRUARY 2025

REGISTERED PROFESSIONAL ENGINEER No. 5329023 GUY C. EHLERS STATE OF UTAH

carollo®

JORDAN VALLEY WATER CONSERVANCY DISTRICT

JORDAN VALLEY WATER TREATMENT PLANT

FILTER AND CHEMICAL FEED UPGRADES

INSTRUMENTATION

P&ID
FILTER 2

VERIFY SCALES
BAR IS ONE INCH ON ORIGINAL DRAWING
0 1"
IF NOT ONE INCH ON THIS SHEET, ADJUST SCALES ACCORDINGLY

JOB NO. 202001.10
DRAWING NO. 30N04
SHEET NO.
OF

$$$$DATE$$$$ $$$$USER$$$$ $$$$PLOT_INFO$$$$ LAST SAVED BY: LRivas

PROJECT NO. 202001-100000 FILE NAME: 20200130N04.dwg

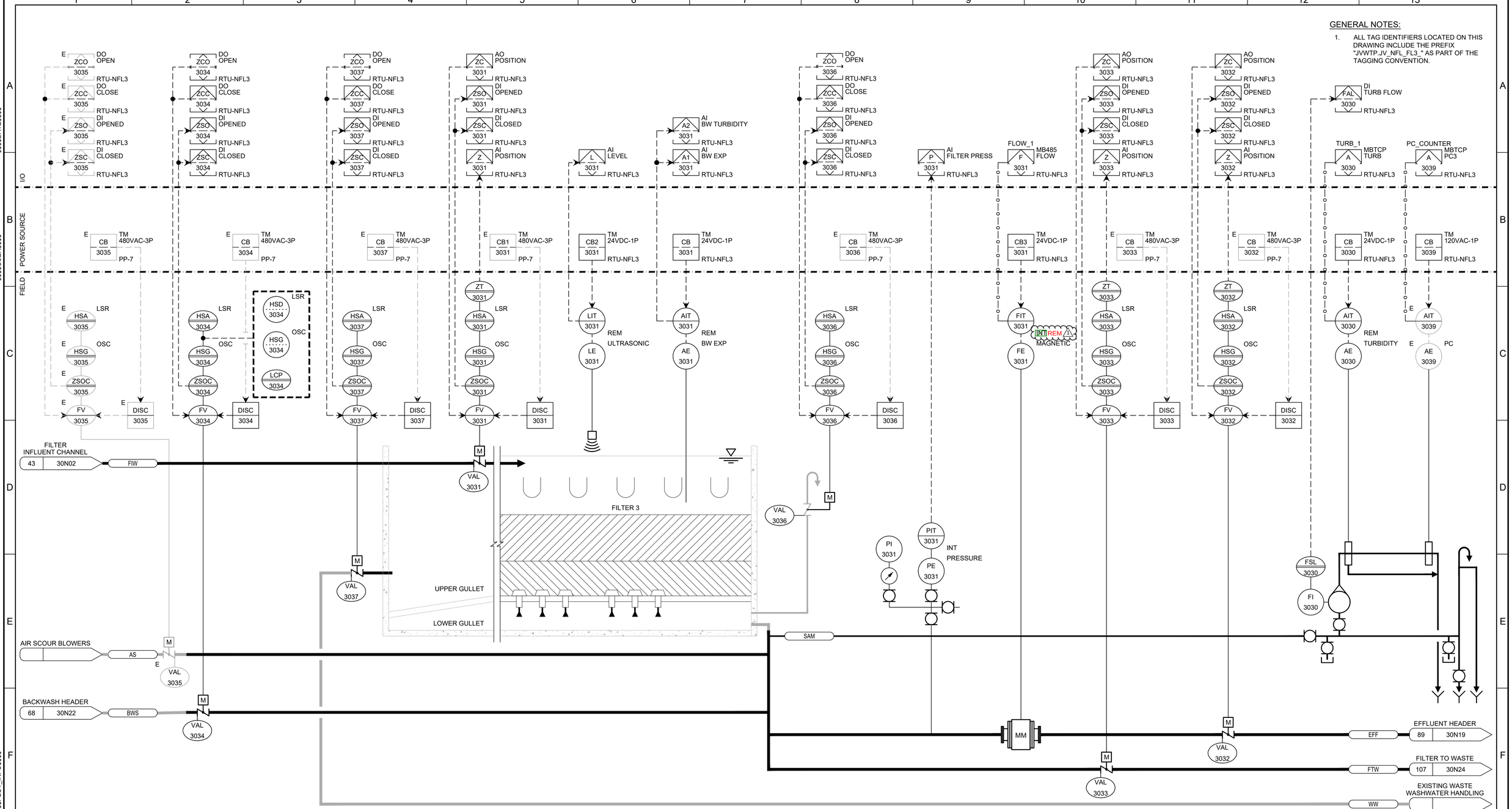

REV	DATE	BY	DESCRIPTION
1	06/03/2025	ERB	ADDENDUM NO. 5

BID SET

DESIGNED GEB
DRAWN DKI
CHECKED GCE
DATE FEBRUARY 2025

REGISTERED PROFESSIONAL ENGINEER No. 5329023 GUY C. EHLERS STATE OF UTAH

carollo

JORDAN VALLEY WATER CONSERVANCY DISTRICT

JORDAN VALLEY WATER TREATMENT PLANT

FILTER AND CHEMICAL FEED UPGRADES

INSTRUMENTATION

P&ID
FILTER 3

VERIFY SCALES
BAR IS ONE INCH ON ORIGINAL DRAWING
0 1"
IF NOT ONE INCH ON THIS SHEET, ADJUST SCALES ACCORDINGLY

JOB NO. 202001.10
DRAWING NO. 30N05
SHEET NO.
OF

$$$$DATE$$$$ $$$$USER$$$$ $$$$PLOT_INFO$$$$ LAST SAVED BY: LRivas

PROJECT NO. 202001-100000 FILE NAME: 20200130N05.dwg

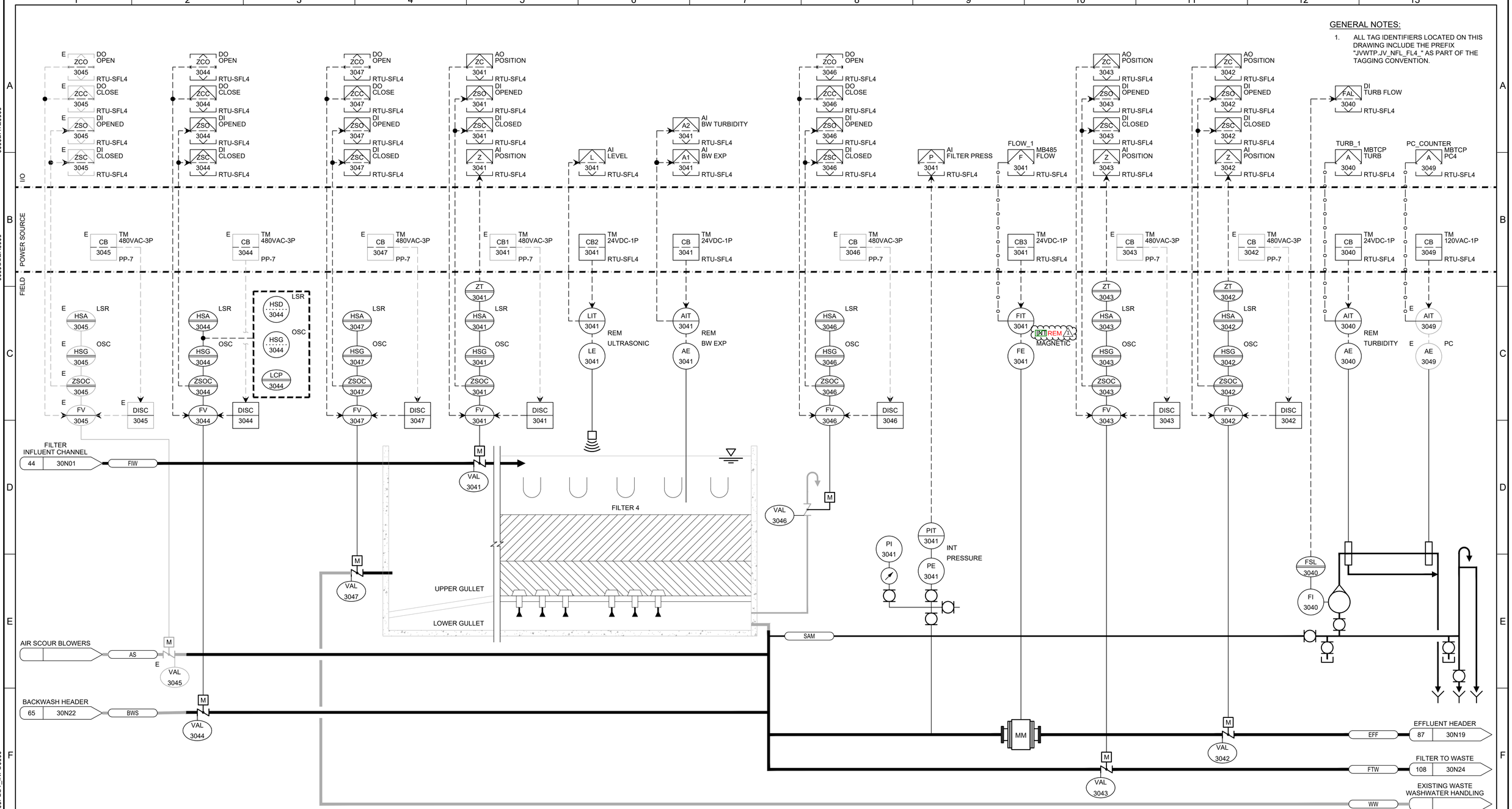

REV	DATE	BY	DESCRIPTION
1	06/03/2025	ERB	ADDENDUM NO. 5

BID SET

DESIGNED GEB
DRAWN DKI
CHECKED GCE
DATE FEBRUARY 2025

REGISTERED PROFESSIONAL ENGINEER No. 5329023 GUY C. EHLERS STATE OF UTAH

carollo

JORDAN VALLEY WATER CONSERVANCY DISTRICT

JORDAN VALLEY WATER TREATMENT PLANT

FILTER AND CHEMICAL FEED UPGRADES

INSTRUMENTATION

P&ID
FILTER 4

VERIFY SCALES
BAR IS ONE INCH ON ORIGINAL DRAWING
0 1"
IF NOT ONE INCH ON THIS SHEET, ADJUST SCALES ACCORDINGLY

JOB NO. 202001.10
DRAWING NO. 30N06
SHEET NO.
OF

$$$$DATE$$$$ $$$$USER$$$$ $$$$PLOT_INFO$$$$ LAST SAVED BY: LRivas

PROJECT NO. 202001-100000 FILE NAME: 20200130N06.dwg

GENERAL NOTES:

1. ALL TAG IDENTIFIERS LOCATED ON THIS DRAWING INCLUDE THE PREFIX "JVWTP.JV_NFL_FL5_" AS PART OF THE TAGGING CONVENTION.

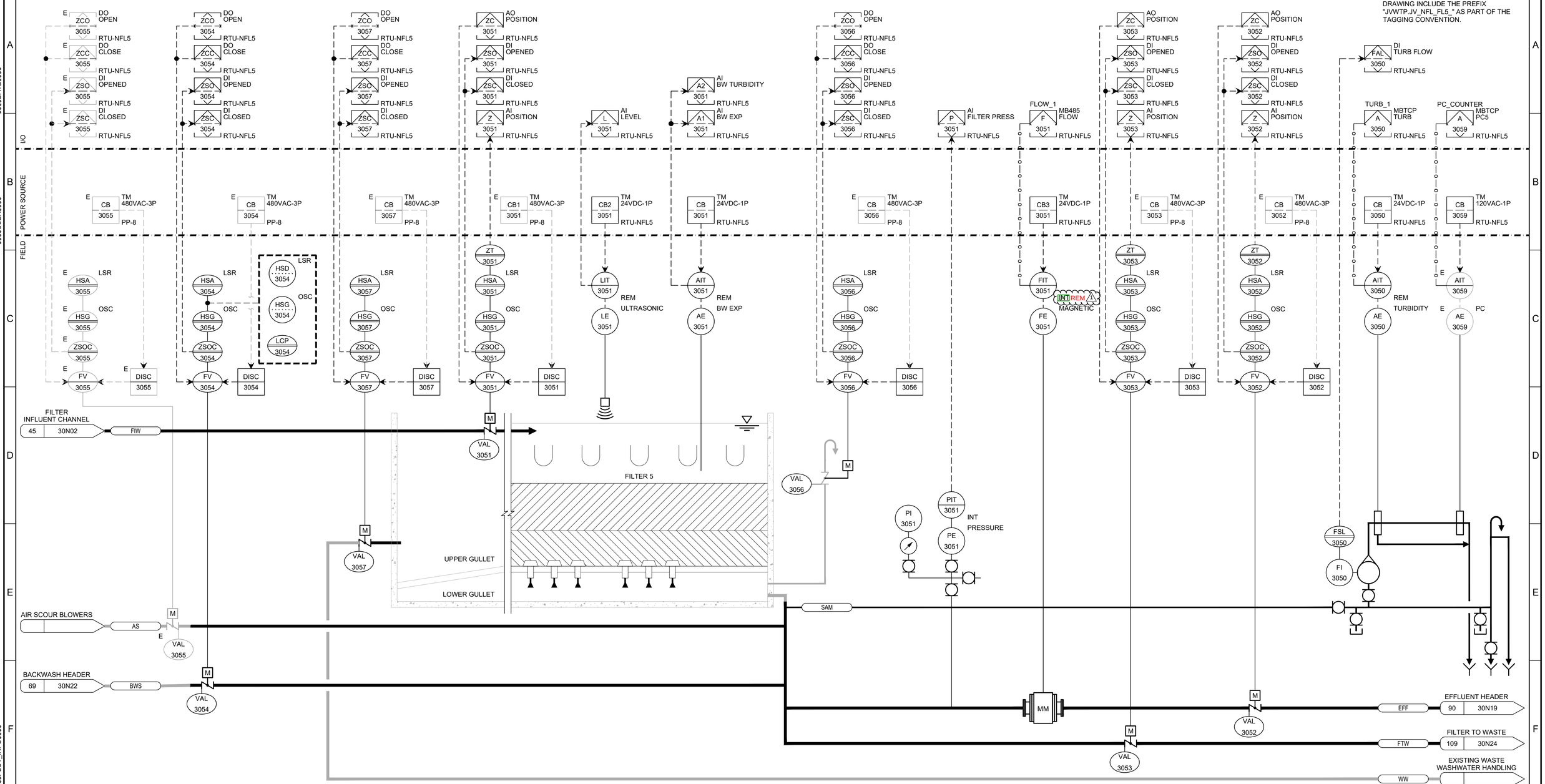

FV-3055
FILTER 5 AIR SCOUR VALVE
0.5HP 480VAC 3PH

FV-3054
FILTER 5 BACKWASH VALVE
0.5HP 480VAC 3PH

FV-3057
FILTER 5 WASTE WASHWATER VALVE
0.5HP 480VAC 3PH

FV-3051
FILTER 5 INLET VALVE
0.5HP 480VAC 3PH

LE-3051
FILTER 5 LEVEL
0-12 FT
TYP NL181 NA900

AE-3051
BW 5 EXPANSION
0-50 NTU
TYP NA902 NA900 NA900

FV-3056
FILTER 5 VENT VALVE
0.5HP 480VAC 3PH

PI-3051
FILTER 5 PRESS INDICATOR
0-15 PSI

PE-3051
FILTER 5 PRESSURE TRANSMITTER
0-10 PSIG
TYP NP501

FE-3051
FILTER 5 EFFLUENT FLOW METER
0-12,390 GPM
30-IN
TYP NF130 NF135 NA900

FV-3053
FILTER 5 FILTER TO WASTE VALVE
0.5HP 480VAC 3PH

FV-3052
FILTER 5 EFFLUENT VALVE
0.5HP 480VAC 3PH

FI-3050
FILTER 5 SAMPLE ROTAMETER
100-1000 ML/MIN

AE-3050
FILTER 5 EFF TURBIDITY
0-1 NTU
TYP NA030 NA090

AE-3059
PARTICLE COUNTER
TYP NA020

REV	DATE	BY	DESCRIPTION
1	06/03/2025	ERB	ADDENDUM NO. 5

BID SET

DESIGNED GEB
DRAWN DKI
CHECKED GCE
DATE FEBRUARY 2025

REGISTERED PROFESSIONAL ENGINEER No. 5329023 GUY C. EHLERS STATE OF UTAH

carollo

JORDAN VALLEY WATER CONSERVANCY DISTRICT

JORDAN VALLEY WATER TREATMENT PLANT

FILTER AND CHEMICAL FEED UPGRADES

INSTRUMENTATION

P&ID
FILTER 5

VERIFY SCALES
BAR IS ONE INCH ON ORIGINAL DRAWING
0 1"
IF NOT ONE INCH ON THIS SHEET, ADJUST SCALES ACCORDINGLY

JOB NO. 202001.10
DRAWING NO. 30N07
SHEET NO.
OF

LAST SAVED BY: LRivas

$$$$DATE$$$$ $$$$USER$$$$ $$$$PLOT_INFO$$$$

PROJECT NO. 202001-100000 FILE NAME: 20200130N07.dwg

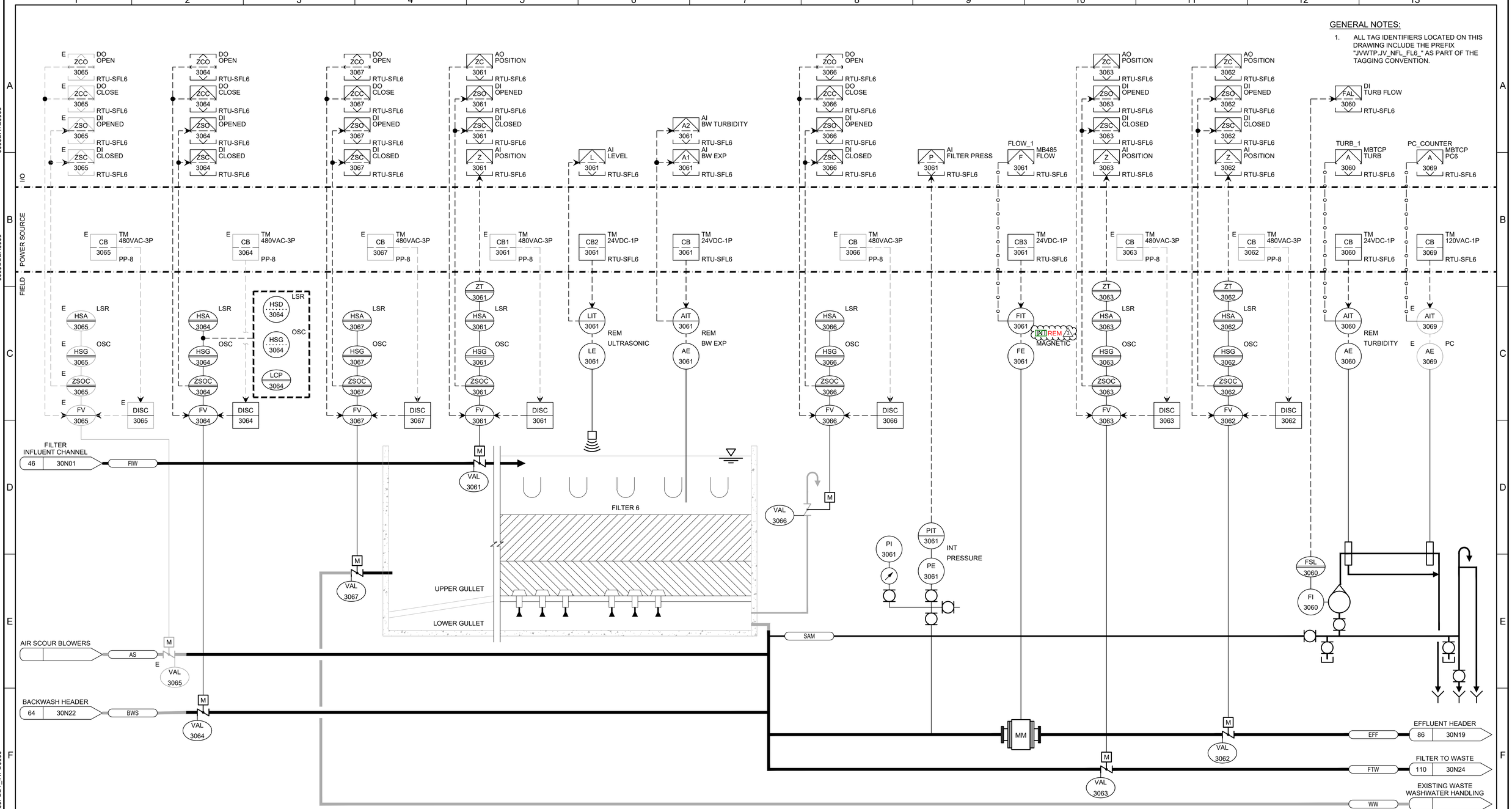

REV	DATE	BY	DESCRIPTION
1	06/03/2025	ERB	ADDENDUM NO. 5

BID SET

DESIGNED GEB
DRAWN DKI
CHECKED GCE
DATE FEBRUARY 2025

REGISTERED PROFESSIONAL ENGINEER No. 5329023 GUY C. EHLERS STATE OF UTAH

carollo

JORDAN VALLEY WATER CONSERVANCY DISTRICT

JORDAN VALLEY WATER TREATMENT PLANT

FILTER AND CHEMICAL FEED UPGRADES

INSTRUMENTATION

P&ID
FILTER 6

VERIFY SCALES
BAR IS ONE INCH ON ORIGINAL DRAWING
0 1"
IF NOT ONE INCH ON THIS SHEET, ADJUST SCALES ACCORDINGLY

JOB NO. 202001.10
DRAWING NO. 30N08
SHEET NO.
OF

$$$$DATE$$$$ $$$$USER$$$$ $$$$PLOT_INFO$$$$ LAST SAVED BY: LRivas

PROJECT NO. 202001-100000 FILE NAME: 20200130N08.dwg

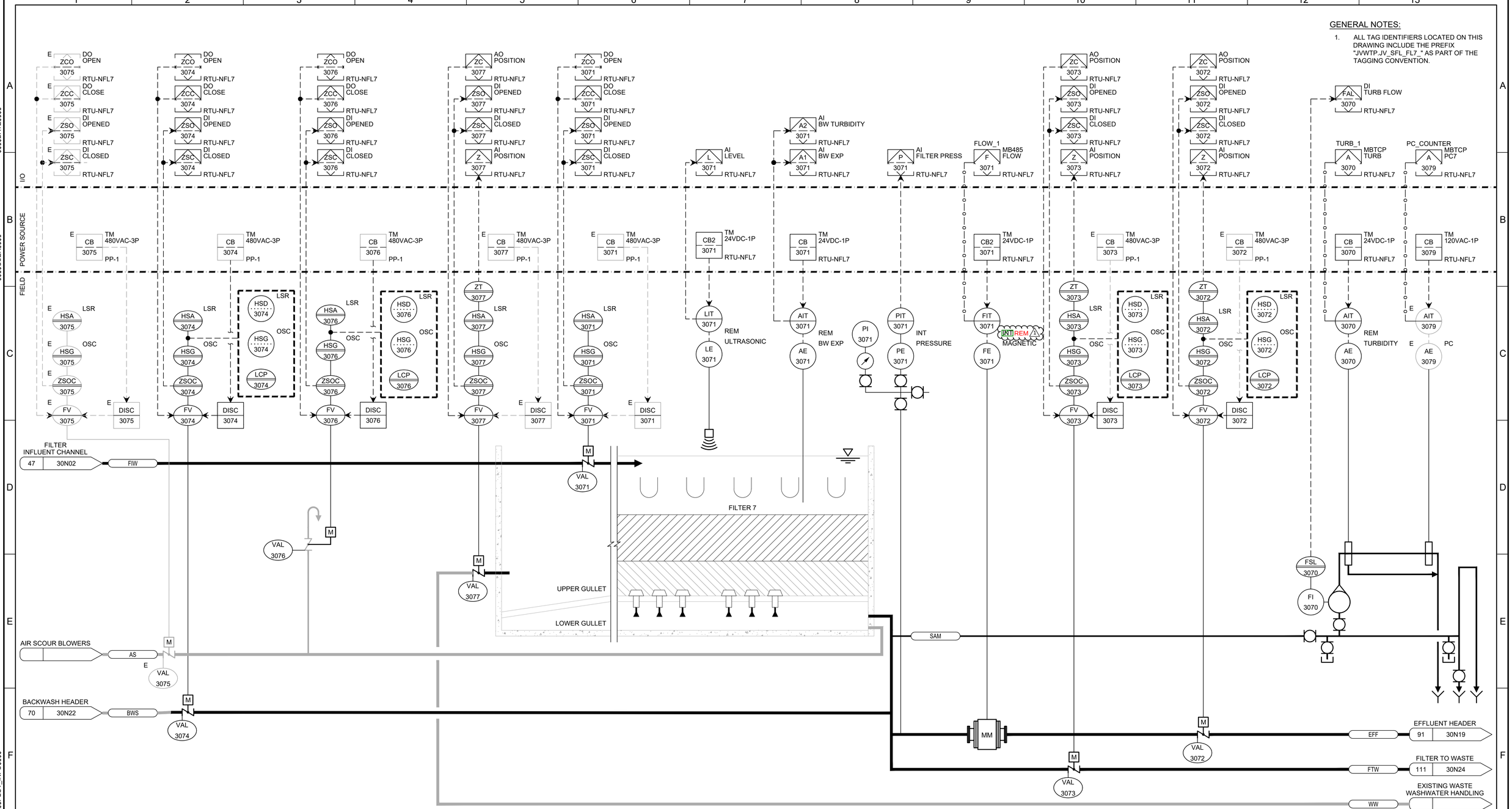

REV	DATE	BY	DESCRIPTION
1	06/03/2025	ERB	ADDENDUM NO. 5

BID SET

DESIGNED GEB
DRAWN DKI
CHECKED GCE
DATE FEBRUARY 2025

REGISTERED PROFESSIONAL ENGINEER No. 5329023 GUY C. EHLERS STATE OF UTAH

carollo

JORDAN VALLEY WATER CONSERVANCY DISTRICT

JORDAN VALLEY WATER TREATMENT PLANT
FILTER AND CHEMICAL FEED UPGRADES
INSTRUMENTATION
P&ID
FILTER 7

VERIFY SCALES
BAR IS ONE INCH ON ORIGINAL DRAWING
0 1"
IF NOT ONE INCH ON THIS SHEET, ADJUST SCALES ACCORDINGLY

JOB NO. 202001.10
DRAWING NO. 30N09
SHEET NO.
OF

LAST SAVED BY: LRivas
$$$$DATE$$$$
$$$$USER$$$$
$$$$PLOT_INFO$$$$

PROJECT NO. 202001-100000 FILE NAME: 20200130N09.dwg

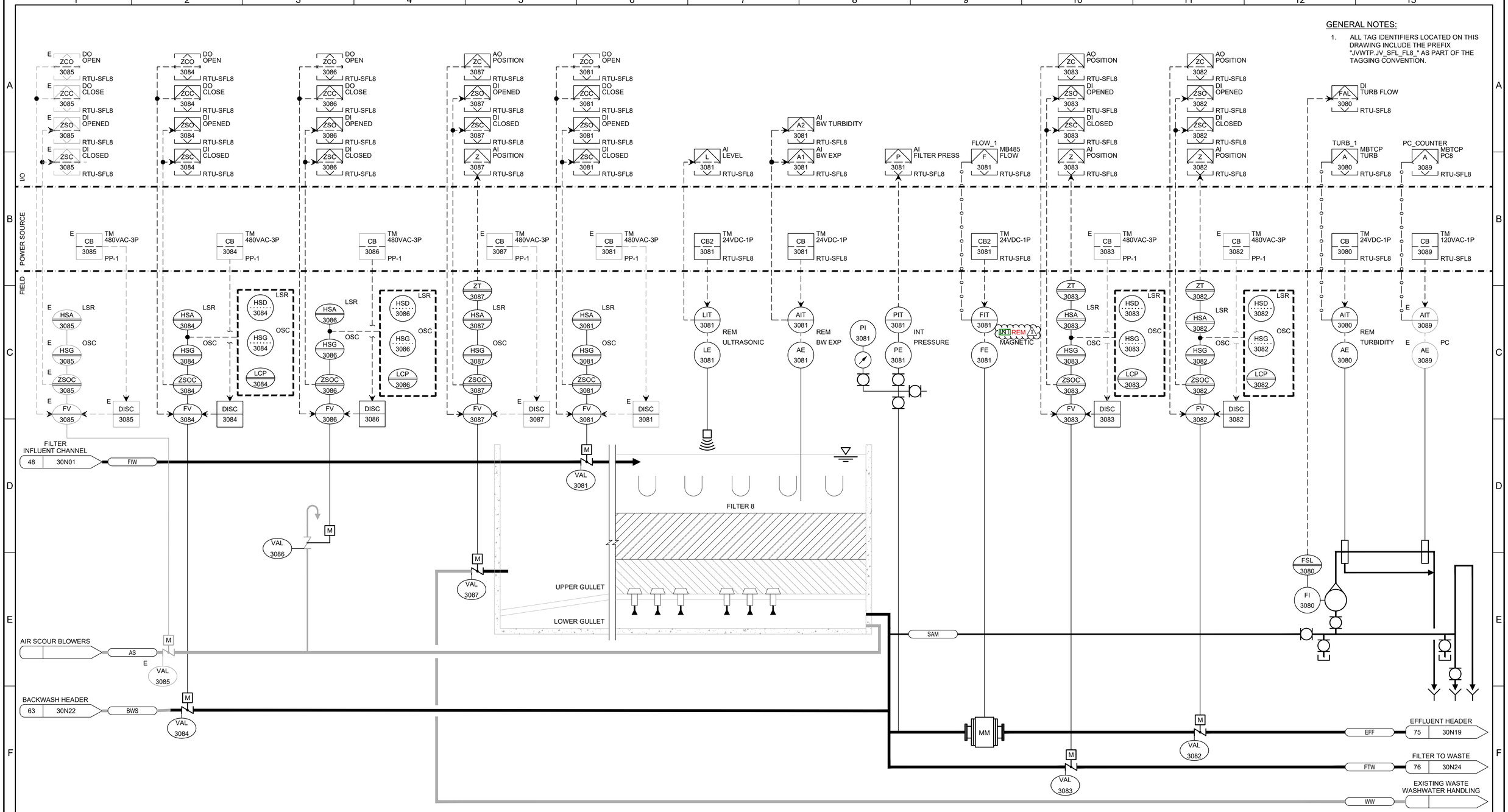

REV	DATE	BY	DESCRIPTION
1	06/03/2025	ERB	ADDENDUM NO. 5

BID SET

DESIGNED GEB
DRAWN DKI
CHECKED GCE
DATE FEBRUARY 2025

REGISTERED PROFESSIONAL ENGINEER No. 5329023 GUY C. EHLERS STATE OF UTAH

carollo®

JORDAN VALLEY WATER CONSERVANCY DISTRICT

JORDAN VALLEY WATER TREATMENT PLANT
FILTER AND CHEMICAL FEED UPGRADES
INSTRUMENTATION
P&ID
FILTER 8

VERIFY SCALES
BAR IS ONE INCH ON ORIGINAL DRAWING
0 1"
IF NOT ONE INCH ON THIS SHEET, ADJUST SCALES ACCORDINGLY

JOB NO. 202001.10
DRAWING NO. 30N10
SHEET NO.
OF

LAST SAVED BY: LRivas

PROJECT NO. 202001-100000 FILE NAME: 20200130N10.dwg

GENERAL NOTES:

1. ALL TAG IDENTIFIERS LOCATED ON THIS DRAWING INCLUDE THE PREFIX "JVWTP.JV_SFL_FL9_" AS PART OF THE TAGGING CONVENTION.

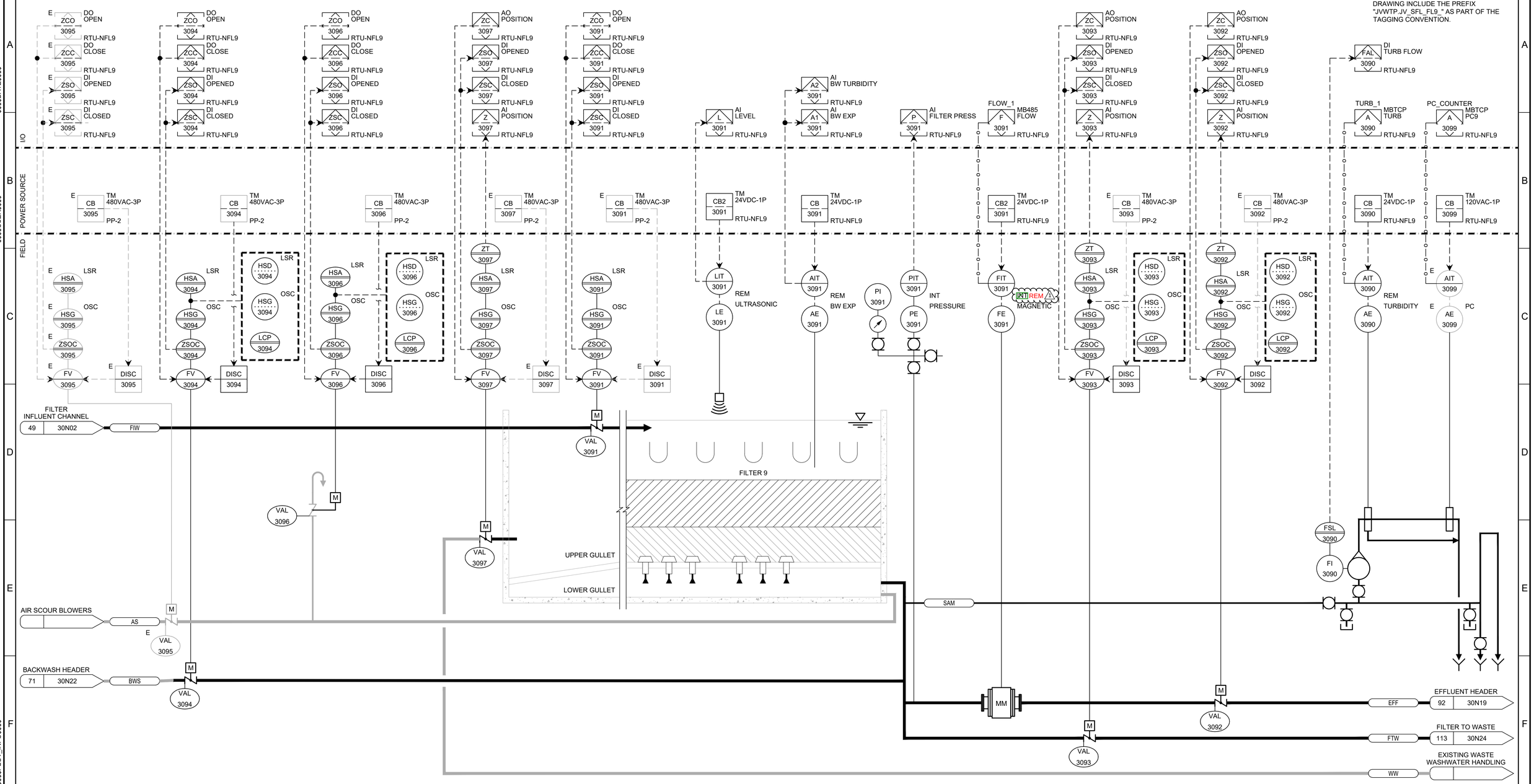

REV	DATE	BY	DESCRIPTION
1	06/03/2025	ERB	ADDENDUM NO. 5

BID SET

DESIGNED GEB
DRAWN DKI
CHECKED GCE
DATE FEBRUARY 2025

REGISTERED PROFESSIONAL ENGINEER No. 5329023 GUY C. EHLERS STATE OF UTAH

carollo

JORDAN VALLEY WATER CONSERVANCY DISTRICT

JORDAN VALLEY WATER TREATMENT PLANT

FILTER AND CHEMICAL FEED UPGRADES

INSTRUMENTATION

P&ID
FILTER 9

VERIFY SCALES
BAR IS ONE INCH ON ORIGINAL DRAWING
0 1"
IF NOT ONE INCH ON THIS SHEET, ADJUST SCALES ACCORDINGLY

JOB NO. 202001.10
DRAWING NO. 30N11
SHEET NO.
OF

$$$$DATE$$$$ $$$$USER$$$$ $$$$PLOT_INFO$$$$ LAST SAVED BY: LRivas

PROJECT NO. 202001-100000 FILE NAME: 20200130N11.dwg

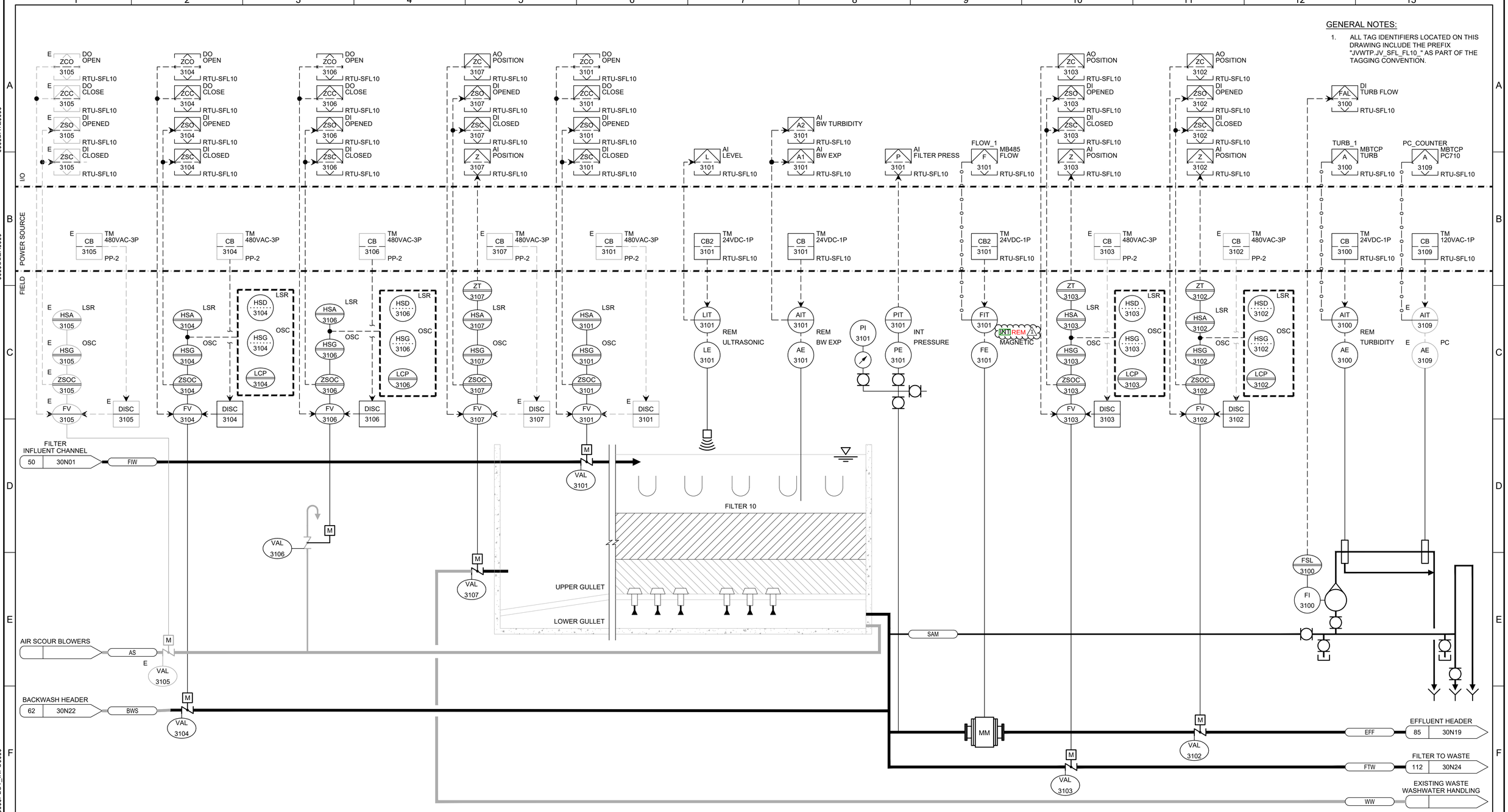

REV	DATE	BY	DESCRIPTION
1	06/03/2025	ERB	ADDENDUM NO. 5

BID SET

DESIGNED GEB
DRAWN DKI
CHECKED GCE
DATE FEBRUARY 2025

REGISTERED PROFESSIONAL ENGINEER No. 5329023 GUY C. EHLERS STATE OF UTAH

carollo

JORDAN VALLEY WATER CONSERVANCY DISTRICT

JORDAN VALLEY WATER TREATMENT PLANT

FILTER AND CHEMICAL FEED UPGRADES

INSTRUMENTATION

P&ID
FILTER 10

VERIFY SCALES
BAR IS ONE INCH ON ORIGINAL DRAWING
0 1"
IF NOT ONE INCH ON THIS SHEET, ADJUST SCALES ACCORDINGLY

JOB NO. 202001.10
DRAWING NO. 30N12
SHEET NO.
OF

$$$$DATE$$$$ $$$$USER$$$$ $$$$PLOT_INFO$$$$ LAST SAVED BY: LRivas

PROJECT NO. 202001-100000 FILE NAME: 20200130N12.dwg

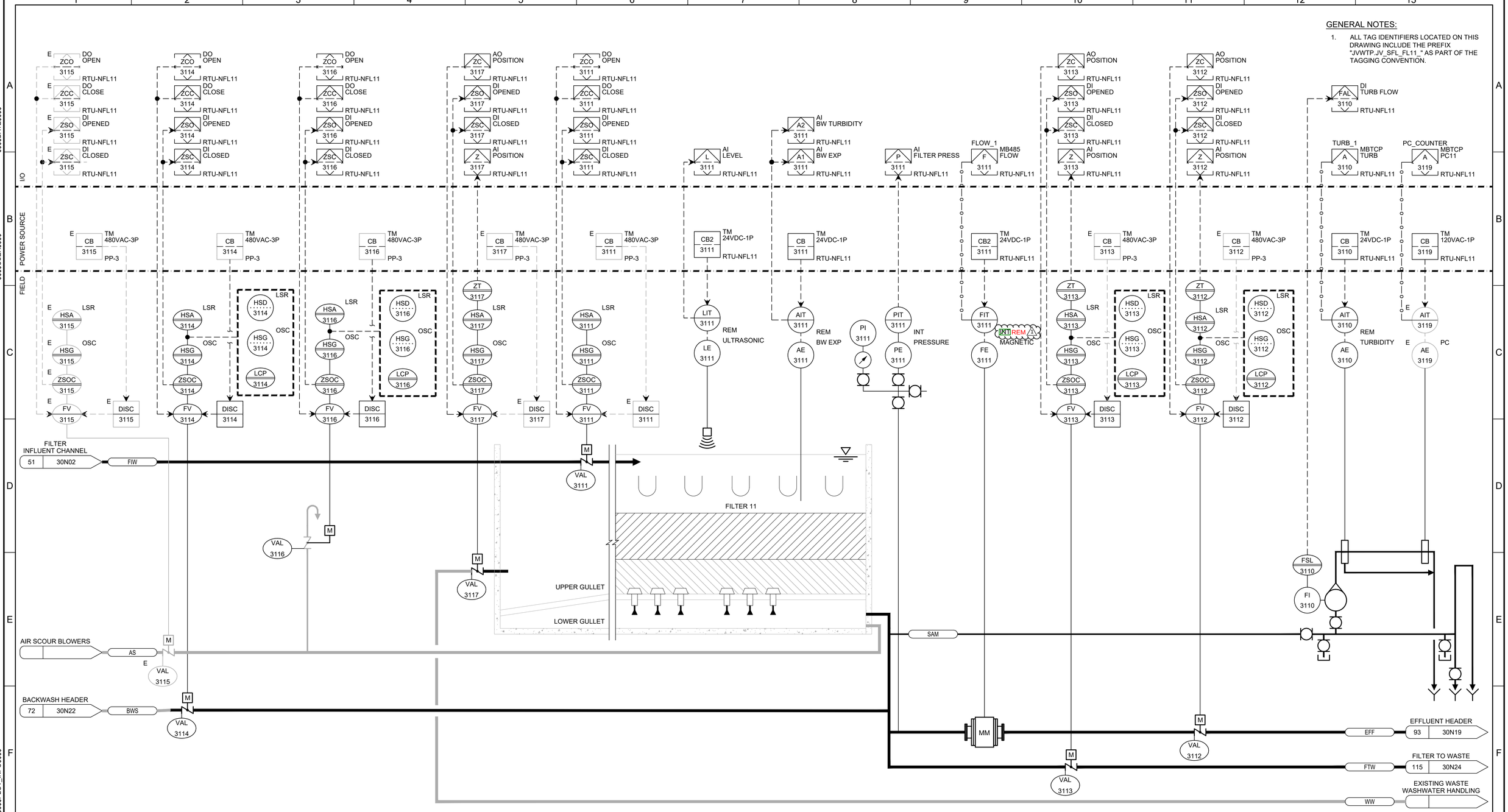

REV	DATE	BY	DESCRIPTION
1	06/03/2025	ERB	ADDENDUM NO. 5

BID SET

DESIGNED GEB
DRAWN DKI
CHECKED GCE
DATE FEBRUARY 2025

REGISTERED PROFESSIONAL ENGINEER No. 5329023 GUY C. EHLERS STATE OF UTAH

carollo

JORDAN VALLEY WATER CONSERVANCY DISTRICT

JORDAN VALLEY WATER TREATMENT PLANT

FILTER AND CHEMICAL FEED UPGRADES

INSTRUMENTATION

P&ID
FILTER 11

VERIFY SCALES
BAR IS ONE INCH ON ORIGINAL DRAWING
0 1"
IF NOT ONE INCH ON THIS SHEET, ADJUST SCALES ACCORDINGLY

JOB NO. 202001.10
DRAWING NO. 30N13
SHEET NO.
OF

$$$$DATE$$$$ $$$$USER$$$$ $$$$PLOT_INFO$$$$ LAST SAVED BY: LRivas

PROJECT NO. 202001-100000 FILE NAME: 20200130N13.dwg

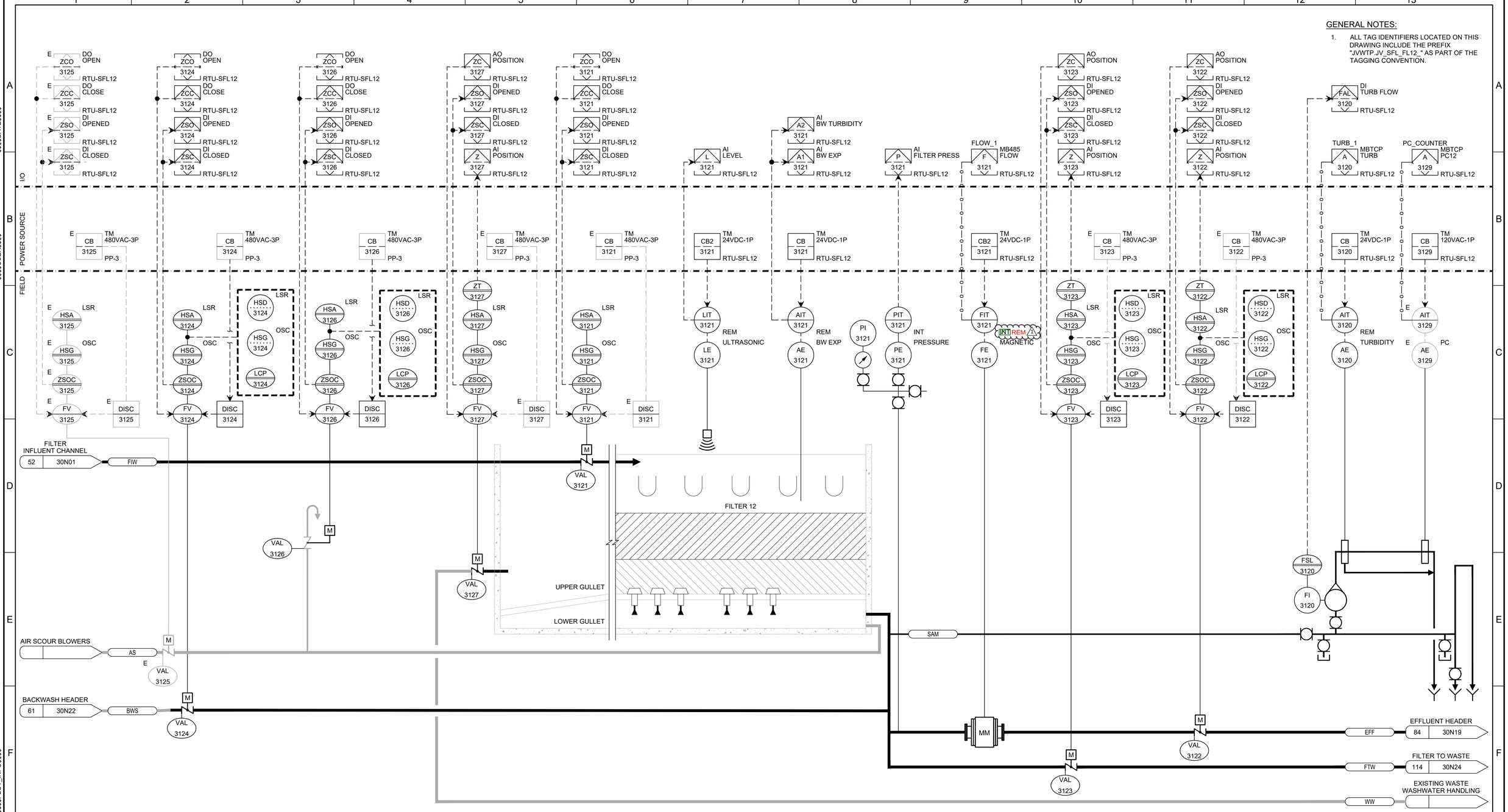

REV	DATE	BY	DESCRIPTION
1	06/03/2025	ERB	ADDENDUM NO. 5

BID SET

DESIGNED GEB
DRAWN DKI
CHECKED GCE
DATE FEBRUARY 2025

REGISTERED PROFESSIONAL ENGINEER No. 5329023 GUY C. EHLERS STATE OF UTAH

carollo

JORDAN VALLEY WATER CONSERVANCY DISTRICT

JORDAN VALLEY WATER TREATMENT PLANT
FILTER AND CHEMICAL FEED UPGRADES
INSTRUMENTATION
P&ID
FILTER 12

VERIFY SCALES
BAR IS ONE INCH ON ORIGINAL DRAWING
0 1"
IF NOT ONE INCH ON THIS SHEET, ADJUST SCALES ACCORDINGLY

JOB NO. 202001.10
DRAWING NO. 30N14
SHEET NO.
OF

LAST SAVED BY: LRivas
$$$$DATE$$$$
$$$$USER$$$$
$$$$PLOT_INFO$$$$

PROJECT NO. 202001-100000 FILE NAME: 20200130N14.dwg

GENERAL NOTES:

1. ALL TAG IDENTIFIERS LOCATED ON THIS DRAWING INCLUDE THE PREFIX "JVWTP.JV_SFL_FL13_" AS PART OF THE TAGGING CONVENTION.

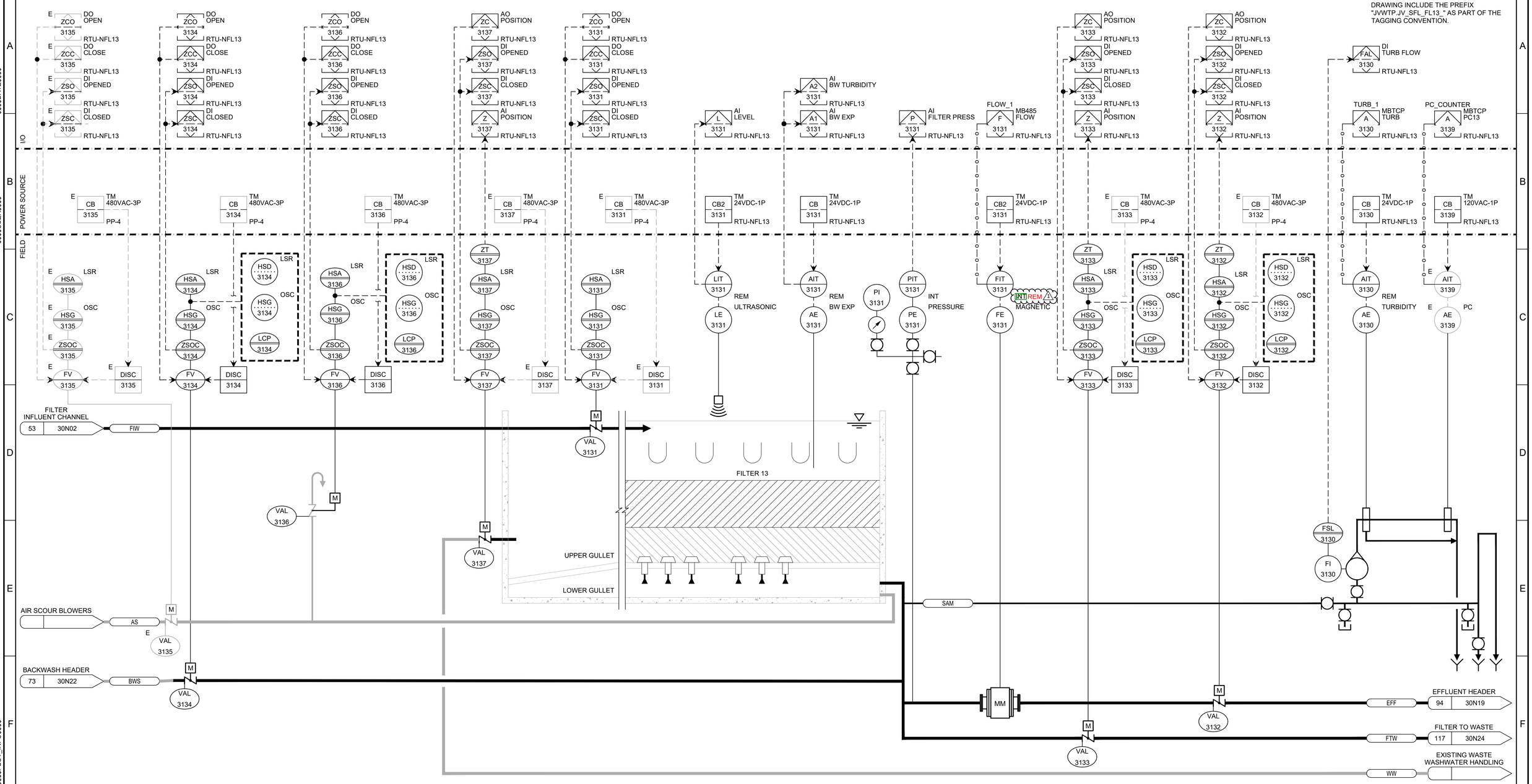

FV-3134
FILTER 13 BACKWASH VALVE
0.5HP 480VAC 3PH

FV-3137
FILTER 13 WASTE WASHWATER VALVE
0.5HP 480VAC 3PH

AE-3131
BW 13 EXPANSION
0-50 NTU
TYP NA902 NA900 NA900

PE-3131
FILTER 13 PRESS TRANSMITTER
0-10 PSIG
TYP NP501

FV-3133
FILTER 13 FILTER TO WASTE VALVE
0.5HP 480VAC 3PH

FI-3130
FILTER 13 SAMPLE ROTAMETER
100-1000 ML/MIN

AE-3139
PARTICLE COUNTER
TYP NA020

FV-3135
FILTER 13 AIR SCOUR VALVE
0.5HP 480VAC 3PH

FV-3136
FILTER 13 VENT VALVE
0.5HP 480VAC 3PH

FV-3131
FILTER 13 INLET VALVE
0.5HP 480VAC 3PH

LE-3131
FILTER 13 LEVEL
0-12 FT
TYP NL181 NA900

PI-3131
FILTER 13 PRESS INDICATOR
0-15 PSI

FE-3131
FILTER 13 EFFLUENT FLOW METER
0-12,390 GPM
30-IN
TYP NF130 NF135 NA900

FV-3132
FILTER 13 EFFLUENT VALVE
0.5HP 480VAC 3PH

AE-3130
FILTER 13 EFF TURBIDITY
0-1 NTU
TYP NA030 NA090

REV	DATE	BY	DESCRIPTION
1	06/03/2025	ERB	ADDENDUM NO. 5

BID SET

DESIGNED GEB
DRAWN DKI
CHECKED GCE
DATE FEBRUARY 2025

REGISTERED PROFESSIONAL ENGINEER No. 5329023 GUY C. EHLERS STATE OF UTAH

carollo

JORDAN VALLEY WATER CONSERVANCY DISTRICT

JORDAN VALLEY WATER TREATMENT PLANT
FILTER AND CHEMICAL FEED UPGRADES
INSTRUMENTATION
P&ID
FILTER 13

VERIFY SCALES
BAR IS ONE INCH ON ORIGINAL DRAWING
0 1"
IF NOT ONE INCH ON THIS SHEET, ADJUST SCALES ACCORDINGLY

JOB NO. 202001.10
DRAWING NO. 30N15
SHEET NO.
OF

$$$$DATE$$$$ $$$$USER$$$$ $$$$PLOT_INFO$$$$ LAST SAVED BY: LRivas

PROJECT NO. 202001-100000 FILE NAME: 20200130N15.dwg

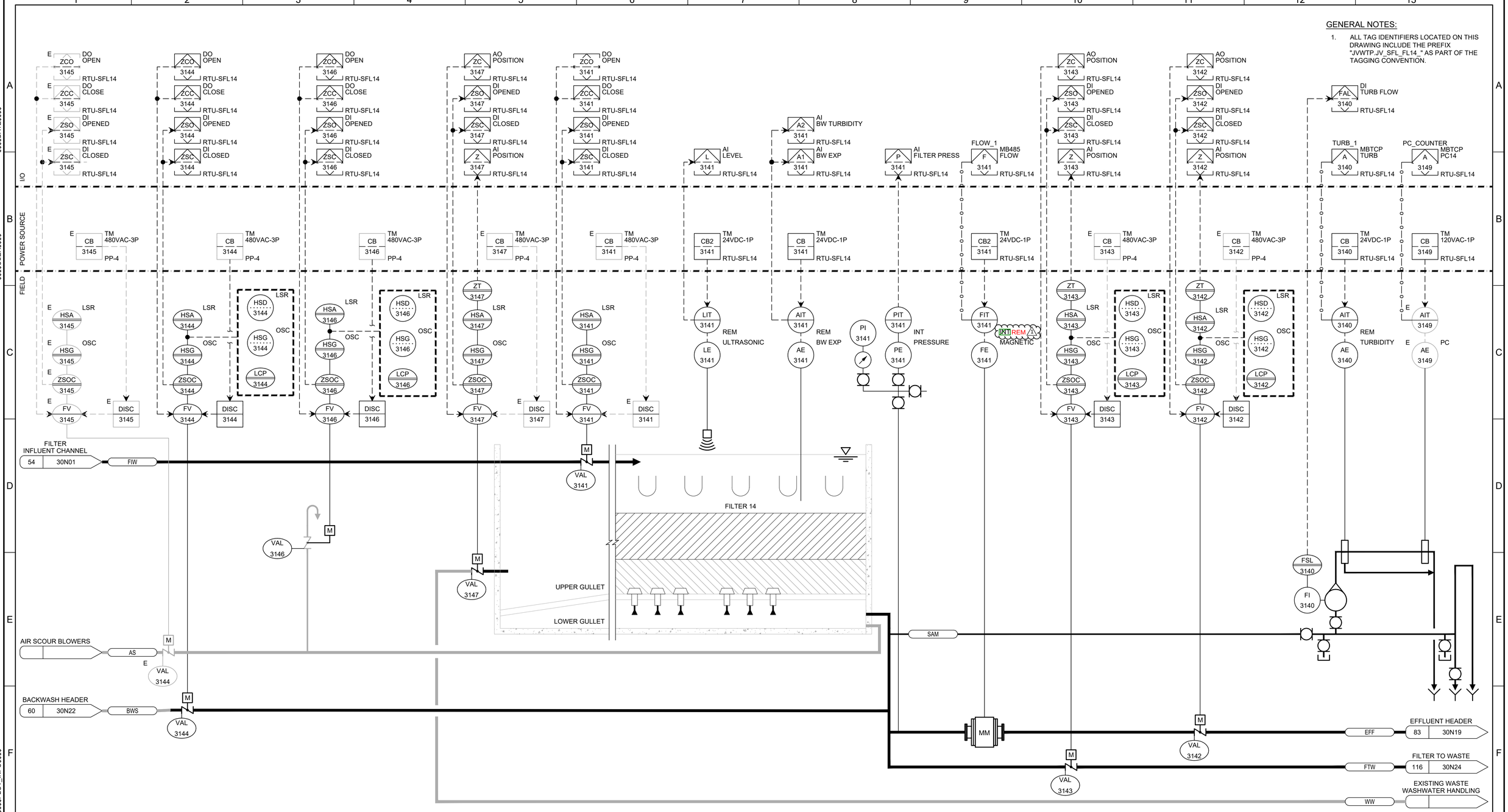

REV	DATE	BY	DESCRIPTION
1	06/03/2025	ERB	ADDENDUM NO. 5

BID SET

DESIGNED GEB
DRAWN DKI
CHECKED GCE
DATE FEBRUARY 2025

REGISTERED PROFESSIONAL ENGINEER No. 5329023 GUY C. EHLERS STATE OF UTAH

carollo

JORDAN VALLEY WATER CONSERVANCY DISTRICT

JORDAN VALLEY WATER TREATMENT PLANT
FILTER AND CHEMICAL FEED UPGRADES
INSTRUMENTATION
P&ID
FILTER 14

VERIFY SCALES
BAR IS ONE INCH ON ORIGINAL DRAWING
0 1"
IF NOT ONE INCH ON THIS SHEET, ADJUST SCALES ACCORDINGLY

JOB NO. 202001.10
DRAWING NO. 30N16
SHEET NO.
OF

$$$$DATE$$$$ $$$$USER$$$$ $$$$PLOT_INFO$$$$ LAST SAVED BY: LRivas

PROJECT NO. 202001-100000 FILE NAME: 20200130N16.dwg

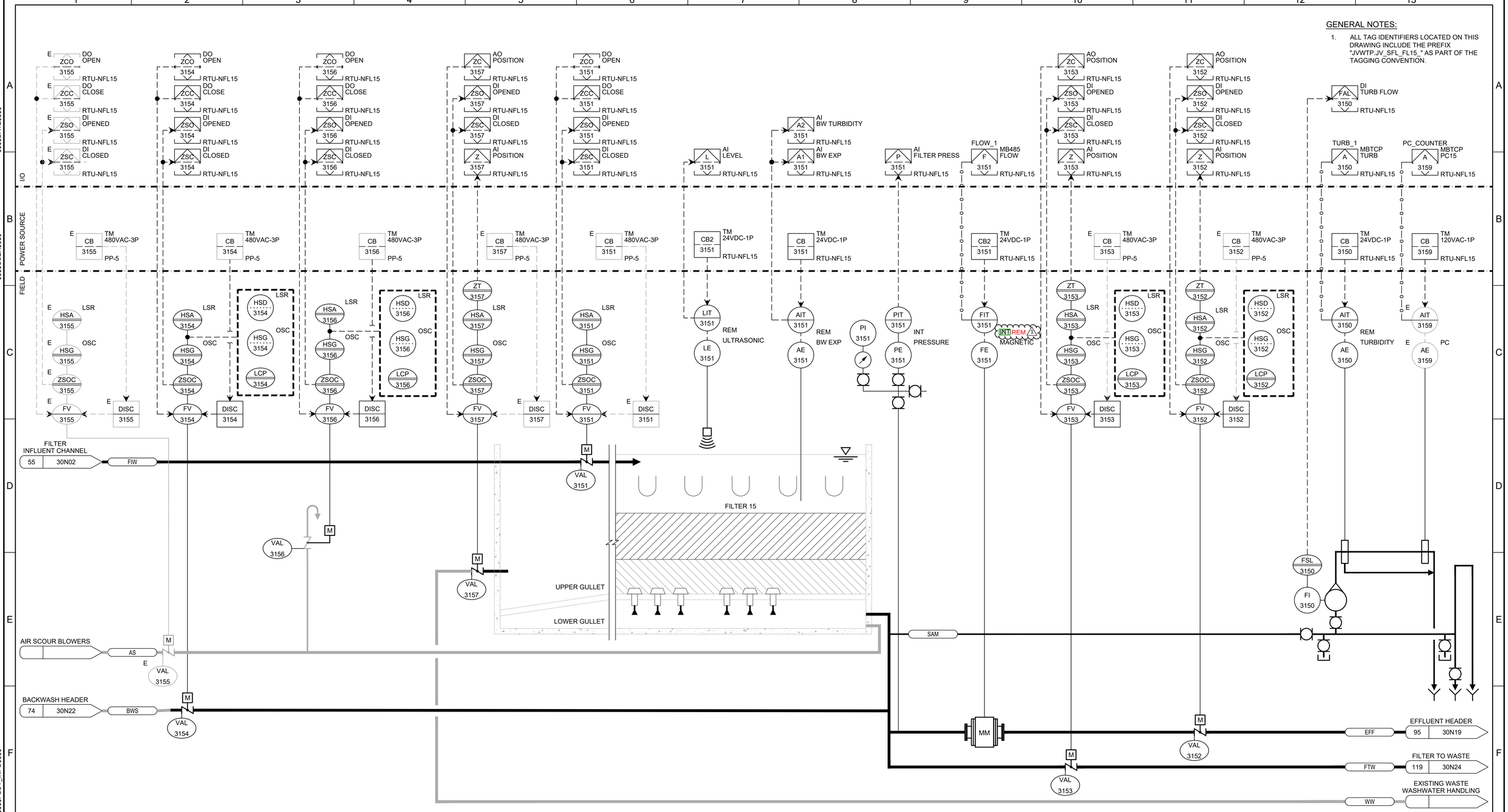

GENERAL NOTES:

1. ALL TAG IDENTIFIERS LOCATED ON THIS DRAWING INCLUDE THE PREFIX "JVWTP.JV_SFL_FL15_" AS PART OF THE TAGGING CONVENTION.

REV	DATE	BY	DESCRIPTION
1	06/03/2025	ERB	ADDENDUM NO. 5

BID SET

DESIGNED GEB
DRAWN DKI
CHECKED GCE
DATE FEBRUARY 2025

REGISTERED PROFESSIONAL ENGINEER No. 5329023 GUY C. EHLERS STATE OF UTAH

carollo

JORDAN VALLEY WATER CONSERVANCY DISTRICT

JORDAN VALLEY WATER TREATMENT PLANT

FILTER AND CHEMICAL FEED UPGRADES

INSTRUMENTATION

P&ID
FILTER 15

VERIFY SCALES
BAR IS ONE INCH ON ORIGINAL DRAWING
0 1"
IF NOT ONE INCH ON THIS SHEET, ADJUST SCALES ACCORDINGLY

JOB NO. 202001.10
DRAWING NO. 30N17
SHEET NO.
OF

$$$$DATE$$$$ $$$$USER$$$$ $$$$PLOT_INFO$$$$ LAST SAVED BY: LRivas

PROJECT NO. 202001-100000 FILE NAME: 20200130N17.dwg

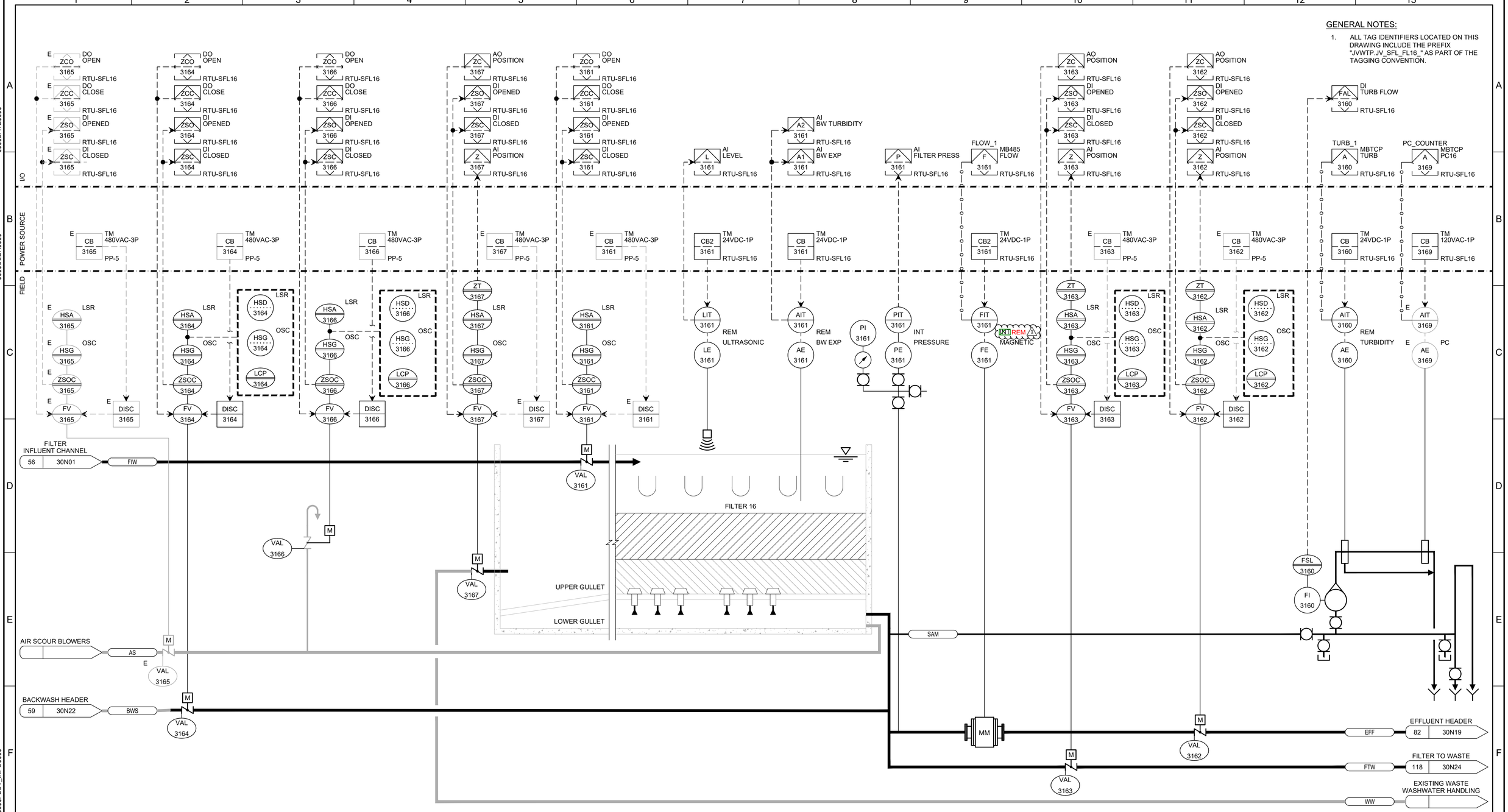

REV	DATE	BY	DESCRIPTION
1	06/03/2025	ERB	ADDENDUM NO. 5

BID SET

DESIGNED GEB
DRAWN DKI
CHECKED GCE
DATE FEBRUARY 2025

REGISTERED PROFESSIONAL ENGINEER No. 5329023 GUY C. EHLERS STATE OF UTAH

carollo®

JORDAN VALLEY WATER CONSERVANCY DISTRICT

JORDAN VALLEY WATER TREATMENT PLANT
FILTER AND CHEMICAL FEED UPGRADES
INSTRUMENTATION
P&ID
FILTER 16

VERIFY SCALES
BAR IS ONE INCH ON ORIGINAL DRAWING
0 1"
IF NOT ONE INCH ON THIS SHEET, ADJUST SCALES ACCORDINGLY

JOB NO. 202001.10
DRAWING NO. 30N18
SHEET NO.
OF

$$$$DATE$$$$ $$$$USER$$$$ $$$$PLOT_INFO$$$$ LAST SAVED BY: LRivas

PROJECT NO. 202001-100000 FILE NAME: 20200130N18.dwg

GENERAL NOTES:

1. ALL TAG IDENTIFIERS LOCATED ON THIS DRAWING INCLUDE THE PREFIX "JV_CF_FF_" AS PART OF THE TAGGING CONVENTION.

KEY NOTES:

1. REPLACE EXISTING VENTURI METERS WITH NEW MAG METERS. REUSE EXISTING WIRES FOR THE FLOW SIGNAL. FURNISH AND INSTALL NEW WIRING FOR THE POWER.

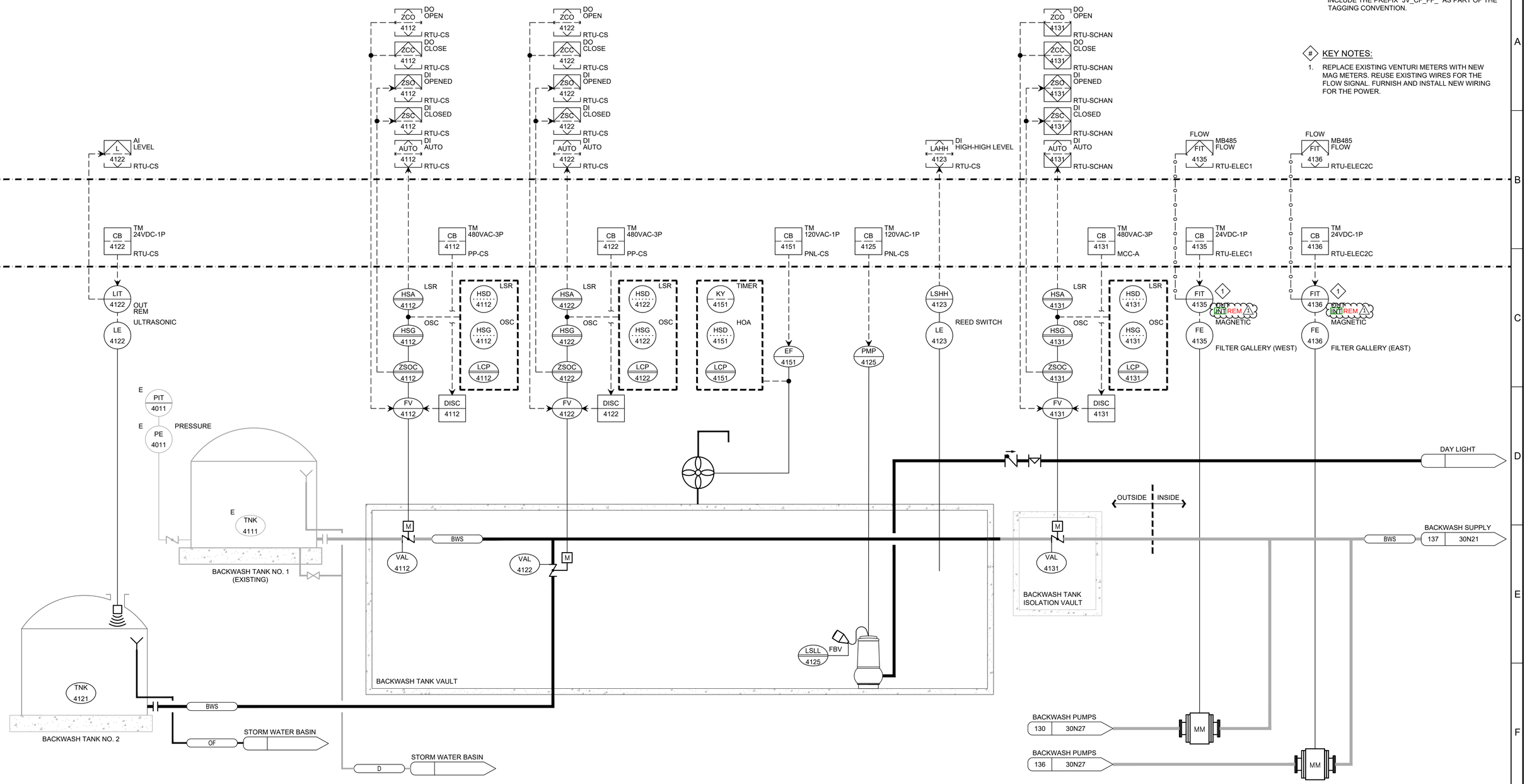

LE-4122
BACKWASH TANK NO. 2 LEVEL
0-31.5 FT
NL173

FV-4112
BW TANK 1 EFFLUENT VALVE
0.5HP 480VAC 3PH

FV-4122
BW TANK 2 EFFLUENT VALVE
0.5HP 480VAC 3PH

EF-4151
BACKWASH VAULT EXHAUST FAN
0.59AMP 120VAC 1PH

PMP-4125
VALVE VAULT SUMP PUMP
0.5HP 120VAC 1PH

LE-4123
BW VAULT HI HI
1" AFF
NL106

FV-4131
BW STORAGE ISOLATION VALVE
0.5HP 480VAC 3PH

FE-4135
~~FILTER BW FLOW 1~~
0-12000 GPM
24-IN
NF130
NF135
NA900

FE-4136
~~FILTER BW FLOW 2~~
0-4000 GPM
12-IN
NF130
NF135
NA900

REV	DATE	BY	DESCRIPTION
2	06/06/2025	ERB	ADDENDUM NO. 5
1	06/03/2025	ERB	ADDENDUM NO. 5

BID SET

DESIGNED GEB
DRAWN TCD
CHECKED GCE
DATE FEBRUARY 2025

REGISTERED PROFESSIONAL ENGINEER No. 5329023 GUY C. EHLERS STATE OF UTAH

carollo

JORDAN VALLEY WATER CONSERVANCY DISTRICT

JORDAN VALLEY WATER TREATMENT PLANT
FILTER AND CHEMICAL FEED UPGRADES
INSTRUMENTATION
P&ID
FILTER BACKWASH SUPPLY 1

VERIFY SCALES
BAR IS ONE INCH ON ORIGINAL DRAWING
0 1"
IF NOT ONE INCH ON THIS SHEET, ADJUST SCALES ACCORDINGLY

JOB NO. 202001.10
DRAWING NO. 30N20
SHEET NO.
OF

LAST SAVED BY: LRivas

PROJECT NO. 202001-100000 FILE NAME: 20200130N20.dwg

GENERAL NOTES:

1. ALL TAG IDENTIFIERS LOCATED ON THIS DRAWING INCLUDE THE PREFIX "JV_CF_FF_" AS PART OF THE TAGGING CONVENTION.

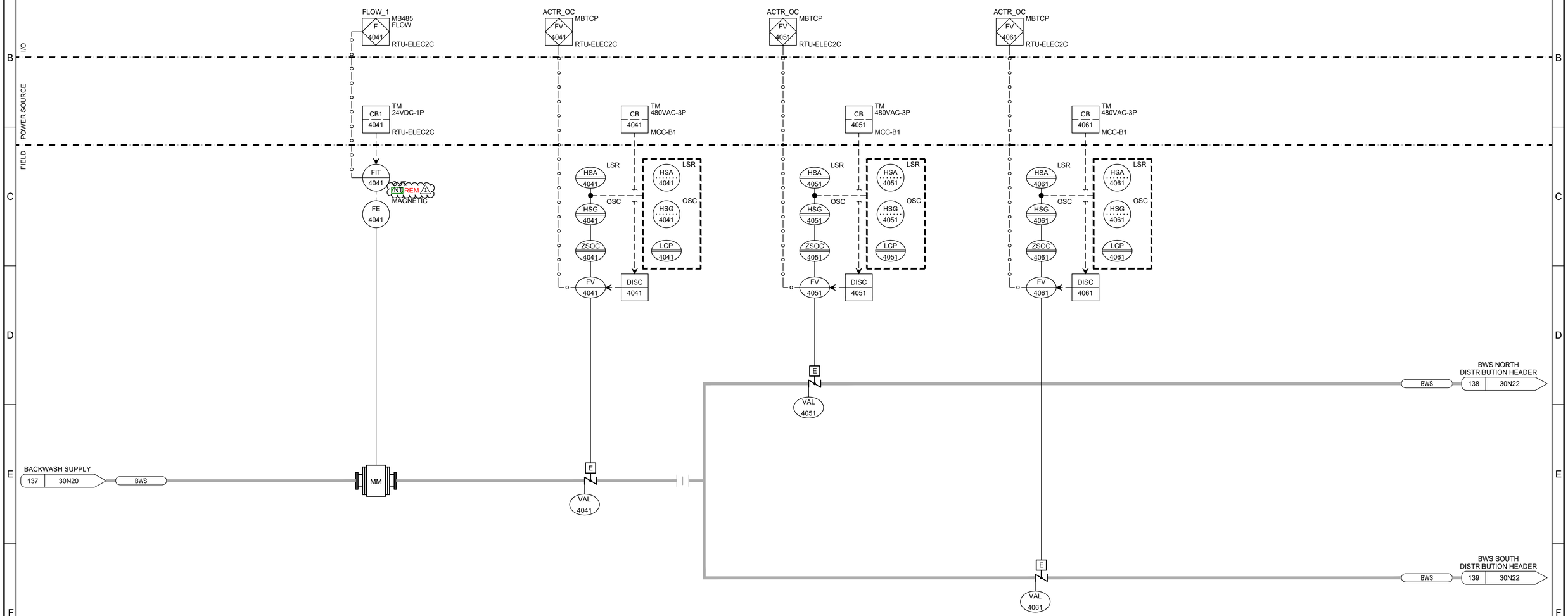

REV	DATE	BY	DESCRIPTION
2	06/06/2025	ERB	ADDENDUM NO. 5
1	06/03/2025	ERB	ADDENDUM NO. 5

BID SET

DESIGNED GEB
DRAWN DKI
CHECKED GCE
DATE FEBRUARY 2025

REGISTERED PROFESSIONAL ENGINEER No. 5329023 GUY C. EHLERS STATE OF UTAH

carollo®

JORDAN VALLEY WATER CONSERVANCY DISTRICT

JORDAN VALLEY WATER TREATMENT PLANT

FILTER AND CHEMICAL FEED UPGRADES

INSTRUMENTATION

P&ID

FILTER BACKWASH SUPPLY 2

VERIFY SCALES

BAR IS ONE INCH ON ORIGINAL DRAWING

0 1"

IF NOT ONE INCH ON THIS SHEET, ADJUST SCALES ACCORDINGLY

JOB NO. 202001.10

DRAWING NO. 30N21

SHEET NO.

OF

LAST SAVED BY: LRvas

PROJECT NO. 202001-100000 FILE NAME: 20200130N21.dwg

GENERAL NOTES:

1. ALL TAG IDENTIFIERS LOCATED ON THIS DRAWING INCLUDE THE PREFIX "JV_CF_FF_" AS PART OF THE TAGGING CONVENTION.

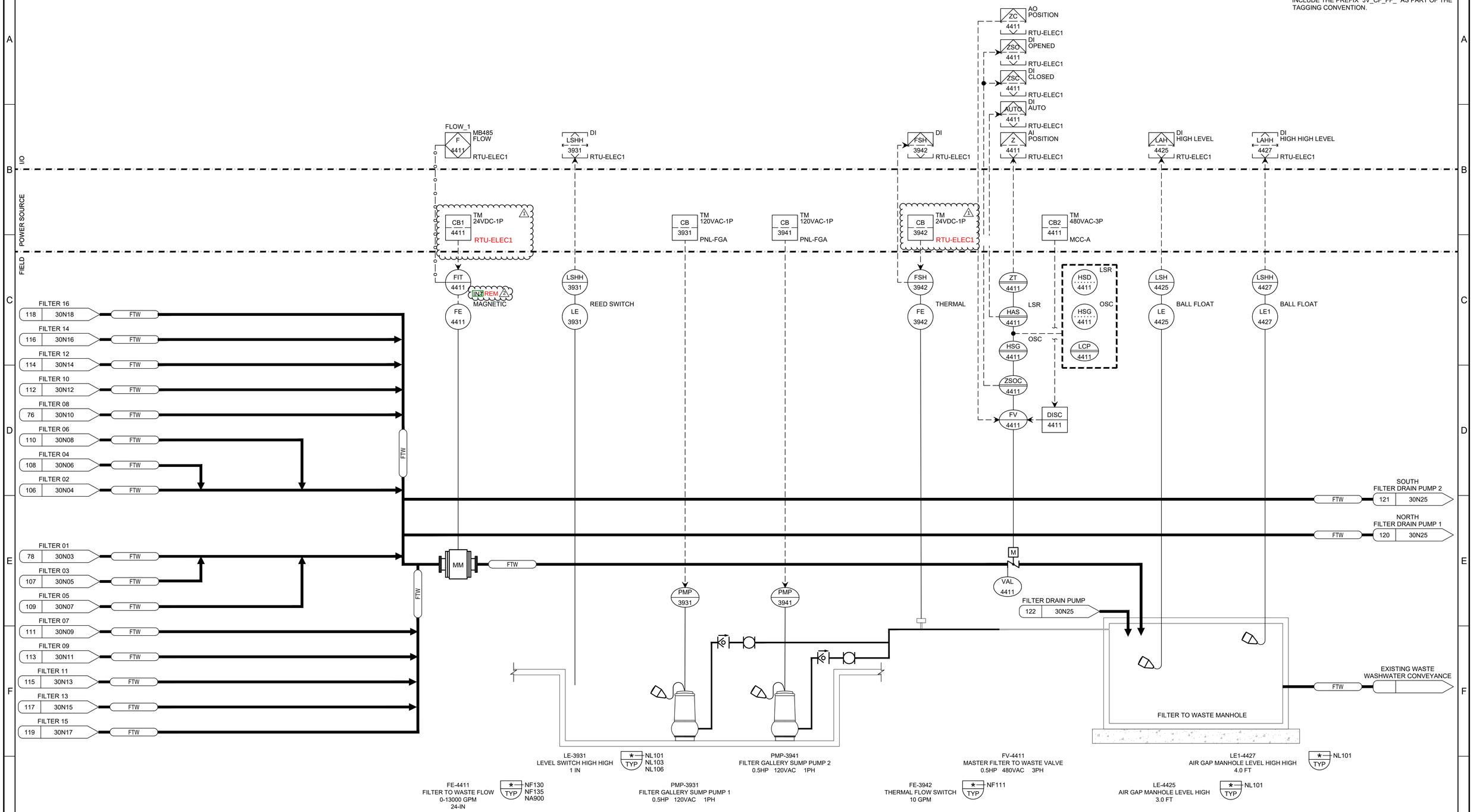

REV	DATE	BY	DESCRIPTION
2	06/03/2025	ERB	ADDENDUM NO. 5
1	04/24/2025	ERB	ADDENDUM NO. 2

BID SET

DESIGNED GEB
DRAWN SGS
CHECKED GCE
DATE FEBRUARY 2025

REGISTERED PROFESSIONAL ENGINEER No. 5329023 GUY C. EHLERS STATE OF UTAH

carollo

JORDAN VALLEY WATER CONSERVANCY DISTRICT

JORDAN VALLEY WATER TREATMENT PLANT

FILTER AND CHEMICAL FEED UPGRADES

INSTRUMENTATION

P&ID
FILTER TO WASTE

VERIFY SCALES
BAR IS ONE INCH ON ORIGINAL DRAWING
0 1"
IF NOT ONE INCH ON THIS SHEET, ADJUST SCALES ACCORDINGLY

JOB NO. 202001.10
DRAWING NO. 30N24
SHEET NO.
OF

LAST SAVED BY: LRivas

PROJECT NO. 202001-100000 FILE NAME: 20200130N24.dwg

JORDAN VALLEY WATER TREATMENT PLANT FILTER AND CHEMICAL UPGRADES
JORDAN VALLEY WATER CONSERVANCY DISTRICT
WEST JORDAN, UTAH

Bidder RFI Responses
June 05, 2025

No.	Question	Response
1	In follow up to previous RFI answer and Addenda received regarding duct banks: Key Note #5 on 01E02 states "No concrete cap on duct bank." Does this apply to all duct banks or only to duct bank ZB? Please clarify.	Key Note 5 on drawing 01E02 applies only to duct bank ZB.
2	I want to confirm my understanding of Alternate A for the High-Performance Butterfly Valves. For the Base Bid, we are to include the cost of General-Purpose BFVs. If the High-Performance BFVs are less expensive, should Alternate A reflect a deduct? And if they are more expensive, should it show an adder? Alternatively, would you prefer that Alternate A reflect the total cost of the High-Performance BFVs, while the Base Bid still includes the General-Purpose valves?	Bid alternate A has been removed from the project, see addendum 5. All butterfly valves shall be high performance double offset.
3	Please confirm there are no domestic material requirements (i.e. Buy American, AIS, or BABA).	This has been confirmed by the owner. There are no union or buy American requirements.
4	Specification 03102, Paragraph 3.03.B calls for form removal times of "Below 50 degrees Forms: 48 hour strip time, Above 50 degrees: Forms: 24 hours strip time." Please note that standard industry practice for AWWA D110 Type I tanks, in accordance with ACI 350, 12 hour strip times when the ambient temperature is above 50 degrees. Please confirm 12 hour form removal is acceptable.	Please cite the specific AWWA D110 or ACI 350 reference for consideration. We may consider this after review of the applicable industry standards.
5	Specification 13207, Paragraph 2.01.I. 6, 8. states the interior ladder and manway shall be 304 SST material. Drawing 41S02, Note 5, calls out for all SST to be 316/316L. Please confirm if 304 or 316 SST is required.	Submerged interior ladder should type 316 stainless steel, Specifications have been edited to reflect this.
6	Plan Drawing 00G14, Table Schedule Table call out for the prestress tank to have 72' ID x 36 WH. Plan Drawing 41S03, show the tank with 74' ID x 38.87 WH. Please confirm which tank dimensions are required. Additionally, confirm the max operating water level of 4800.40 is correct.	00G14 has been marked up to show the correct dimensions of 74' ID and 36.65' height to the spring line, as shown on 41S03. The max operating height of 4800.4 and the overflow height of 4800.9 are correct.
7	Geotechnical Report, Page 2, and Section 6.3.2.1 state a bearing capacity of 4,000 PSF. Plan Sheet 41S03, General Note 2.E. states a 3,000 PSF bearing capacity. Please confirm the allowable bearing capacity for the tank design.	The geotech sub has confirmed that a net allowable bearing capacity of 4,000 psf may be used for this area. 41S03 has been updated accordingly.
8	Page 12, section 4.5.2 in the geotechnical report notes the proposed tank location seismic site class as C. Table 2 on Page 13 notes the seismic site class as D. Drawing 00GS01, Structural Design Criteria - General, notes the seismic site class as C. Specification section 13207.1.06.D.10 notes the seismic site class as D. Please review and advise which site class is to be used for the seismic design of the tank structure.	Section 4.5.2 assigns site class C to this site. Table 2 on the following page only uses other classes as a default. All seismic design on this site should be for site class C and specification section 13207 has been adjusted to reflect this.
9	Page 18, section 6.3.3 of the geotechnical report notes that maximum width for continuous footings is 4'-0". Please note that due to the weight of the proposed tank structure the minimum width of the continuous wall footing will be 5 feet in width and may need to be wider, up to 8 feet. Please review and confirm that a wall footing up to 8 feet in width is acceptable.	The geotech sub has confirmed that 8 ft wide footings will be acceptable.
10	The geotechnical report and project drawings note the allowable bearing pressures as a 'net' value. Please note that for design purposes, we are assuming this NET soil bearing pressure does not include the soil and/or water overburden. Please confirm whether this assumption is acceptable.	This assumption is correct, net soil bearing pressure does not include soil/water overburden.
11	Page 19 of the geotechnical report notes that the site has a potential for up to 0.1 inch of settlement which appears to be a total settlement value. We were unable to determine if there will be differential settlement or over what distance the differential settlement will occur. Please note that our typical 6" flexible membrane floor slab foundation is a non-structural element and is not designed to behave rigidly in the case of differential settlement. Due to the sensitive nature of water tanks to differential settlement, it is our recommendation to limit differential settlement values to a maximum of ¼" in 10' over any horizontal distance across the tank floor and footings. Please have the Geotechnical Engineer review and confirm that the currently recommended subgrade preparation can accommodate our recommended differential settlement guidelines for the tank membrane floor slab.	There has been no assessment of differential settling in the geotechnical report. Please coordinate directly with the geotechnical sub, IGES, regarding report # 00823-023.
12	Spec 13207 Section 1.05.2.b indicates that the tank (sub) contractor shall have in its employ for this project a team, comprised of staff of both the tank contractor and tank prestressor, consisting of an on-site project manager, concrete foreman, shotcrete foreman, and prestressing foreman, each of whom shall have constructed in the last 10 years a minimum of 5 AWWA D110 Type I tanks with domed concrete roofs having a capacity of 1.0 MG or greater. For the individual team members, please confirm that experience with prestressed concrete tanks with flat slab roofs is acceptable in addition to dome roofs to meet the experience requirement.	This requirement has been modified to require only 2 of the 5 tanks constructed in the past 10 years to have domed roofs.
13	Spec 13207 Section 1.05.3 indicates the design engineer shall be licensed as a Structural Engineer in the State of Utah and then states the design engineer shall be a licensed as a Professional Engineer in the State of Utah. It is common practice for water storage tanks to be designed by a Professional Civil Engineer in the State of construction. Please confirm that being licensed as a professional Engineer in the State of Utah is acceptable.	Delegated structural design for the backwash tank may be signed by a PE licensed in the state of Utah. This adjustment has been reflected in the specification.
14	Can you clarify how many nozzles are in filters 1-6 and if the tailpipes will be removed?	All of the existing nozzles, media, and underdrain slab will be demolished in Filters 1-6. See Specification 13224 for more details on removal and replacement of underdrain system in Filters 1-6. Sizing, number, and arrangement of replacement nozzles are determined by the manufacturer.
15	Can you clarify whether the concrete floors in filters 7-16 are being removed as well as the floors in filters 1-6?	The existing media, nozzles, and concrete floors will be demolished in Filters 1-6 (see 30D01 and 30D02). New media, underdrain floor and nozzles will be installed in Filters 1-6 (see 30M04 and Section W on 30M15). For Filters 7-16, the existing concrete floor shall be protected in place and shall remain, with only media and nozzles being removed (see 30D01 and 30D03). New media and nozzles will be installed in Filters 7-16 (see Section M on 30M11). The new nozzles will be direct, one-piece replacements of the existing Patterson Candy nozzles (see Specification Section 13224).
16	We will not be able to meet the maximum cementitious limits in Table 3; Concrete Classes. Can we exceed the maximum cementitious limits if we still comply with the shrinkage and W/C ratio requirements? Trial batches will be required to determine the minimum amount of cementitious material we can use to produce a mix design that is pumpable and workable. With our aggregates S.G. we will not be able to produce concrete with a unit weight greater than 140 lbs, per spec section 03300 2.02 F b. 1	We can relax the cementitious materials limit to 650 lb/yd^3. This is expected to increase the permeability of the concrete by about 25%, increase shrinkage slightly, and will require a thermal control plan to be followed for any placements thicker than 18". Strict observance of curing requirements in the specs must be followed as well to offset some of these negative consequences. A unit weight of 140 pcf is acceptable, but no lighter except for placements specifically called out as lightweight concrete. In particular, the tall PAC Silos rely on the weight of the foundation to prevent them from tipping over in an earthquake.
17	Does the duct bank detail included in addendum 4 require grounding that is described in specification 16133? Will the specification be updated to match the detail?	Provide a bare copper ground wire the entire length of each duct bank per Specification Section 16133-3.03.A.4.
18	In General Conditions under Article 5.02 Insurance part 3. Comprehensive Automobile Liability – It is our understanding that Utah Law allows part C "Uninsured Motor Vehicle Coverage" to be rejected. This requirement offers no protection to the Owner or the Public. We are requesting this requirement be removed.	No changes to the general conditions will be made at this time per JVWCD legal department.

19	Please clarify question pertaining to Owner's coverage of special inspections as described in section 01455 and including attachments A-G. Are there buildings or structures in which the special inspection will not apply? i.e. the pre-stressed tank, cast in place vaults, trench compactions outside of building foot prints. Depending on the answer to this it may be necessary for the Contractor to also provide similar compaction testing, concrete breaks, rebar inspections etc. for areas on the project that are not covered by "Special Inspection" requirements.	All buildings and structural items, including supports for utilities, require special inspections, inside and outside the building footprint, unless fabricated by an approved fabricator. 2021 IBC Section 1704.2.5.1 provides clarification regarding fabricator approval: "Special inspections during fabrication are not required where the work is done on the premesis of a fabricator approved to perform such work without special inspection. Approval shall be based on review of the fabricator's written fabrication procedures and quality control manuals that provide a basis for control of materials and workmanship, with periodic auditing of fabrication and quality control practices by an approved agency or the building official. At completion of fabrication, the approved fabricator shall submit a certificate of complicance to the owner or the owner's authorizd agent for submittal to the building official as specified in Section 1704.5 stating that the work was performed in accordance with the approved construction documents."
20	In Section 01140 a table is provided for the outage types, durations, and purposes. Under Partial Plant a window of Oct 15 – Apr 15 is listed (6 months). It also states the partial shutdown can be up to 3 months in duration. Please clarify the intent here. Can there be a partial shutdown 3 months long anytime during the 6 month window, or can the partial shutdown be for the duration of the 6 months? How does the partial plant shutdown interface with the Complete Plant shutdown? For example – Can we start a partial shutdown on Oct 15th, turn into a Complete shutdown on Nov 1 through Feb 28 and then return to partial shutdown until April 15th?	A partial shutdown of up to 3 months of duration can occur any time in the 6 month window. Two partial plant shutdowns can occur for the majority of the 6 month window if desired – there is a need to switch partial plant operations (1 week of time as noted in the table) or conduct a complete shutdown after 3 months of operation. The partial shutdown is limited to 3 months at a time as routine maintenance activities (e.g. basin washdown or other routine activities) will need to be performed on the operating portion of the plant following 3 months of operation. Different types of shutdowns can follow each other as described in the example provided with the time frames indicated. Note that there are some activities (e.g. filter underdrain testing and filter media placement) that cannot be performed during a complete plant shutdown will need to be done during a partial plant shutdown, as water needs to be recycled. See 1.11, V.9. So, it may be necessary to plan for a partial plant shutdown rather than complete plant shutdown depending on construction activities scheduled, even during the Nov 1 – Feb 28 window where a complete plant shutdown would otherwise be acceptable.
21	On sheet 30S04 Section T – Can the Contractor propose other options for executing this detail?	The contractor can propose other options. They can only be used if reviewed and approved by the structural engineer of record.
22	On sheet 01C16 a gas meter is shown. It is unclear if this meter is downstream from the JVWCD Enbridge meter / ownership line. If it is not downstream of the Enbridge meter it is our understanding the line tapping into the gas line up through the meter installation will need to be installed by Enbridge. Please clarify this element.	This new meter is being placed upstream of the existing meter for natural gas supply to the new generator. The gas company (Enbridge) will be responsible for installation of the meter but the contractor will need to coordinate with them directly about the needed excavation, trenching/backfill, pavement replacement, and piping downstream of the new meter.
23	Drawing 01C03 appears to be missing the finished grade contours on it. The drawing to the south (01C02) has contours that run off the edge of the page but they don't appear to continue on the next page above. Please provide.	This area has no grade changes, so no new contours are shown.
24	In section 14634 part 2.04 it calls for rail clamps. Can hook bolts be used in place of the rail clamps?	Either hook bolts or rail clamps can be used for this bridge crane.
25	I am confused about paint system EPX-M-6-BG, metals below grade or buried pipes. Reviewing the pipe schedule for buried piping they refer the coatings to be PCB, FBE, PTW, PEN or WXT and reference a Pipe Spec Section. In each of their respective sections they described the coatings each pipe should receive from the manufacturer with the exception of PW (DIP) piping which indicates it should be double PEN. I am having difficulty understanding the intent of what specific buried piping applications that Section 09960 would be responsible to execute. The pipe schedule is clear when they indicate coating should be EPU and it falls under section 09960. Could you have the engineer be more specific of the buried piping that they envisioned would fall under section 09960.	Per the pipe schedule, all buried steel pipe should have plural component polyurethane (PCP) coating. The PCP requirements for steel pipe are detailed in Section 15272. There are no pipes that require EPX-M-6-BG on this project.
26	Please consider the attached Wilo pump model FA15.52G with FK motor, which matches the N Flygt impeller and is suitable for dry pit application.	Or equals are not being evaluated at this time. The contractor can submit this as an 'or equal' and it can be evaluated during the submittal phase, but that does not guarantee that it will be approved.
27	Detail EM015 does not call for a grounding conductor to be run along with direct buried conduits and Duct Banks. There are some points of connection shown between Duct Banks Ground Rings. Please clarify if Grounding conductors along underground conduits and Duct Banks will be required.	Provide a bare copper ground wire the entire length of each duct bank per Specification Section 16133-3.03.A.4.
28	See sheet 01E02 note #9. At the completion of the project, Panel Cell is to be refed from PNL-CS in the Caustic Soda Building. This run does not appear in the Conduit Schedule. Please provide a wire size for this feeder which is Approx. 500' away. Please clarify if a conduit will need to be added to Duct Banks A, G, F, & ZA for this feeder.	Conduits L-01-061, L-01-062, L-01-063, and L-01-064 were updated by Addendum 1 to show the path for the permanent power feed to PNL-CELL. Conduit L-01-064 will be updated by a markup to clarify the power source as PNL-CS and not RTU-CS.
29	Please clarify if All of the CCTV cameras will be Supplied and Installed by the Owner's Security Contractor. See sheets 01E02, 63E16, & 65E10. If the Electrical contractor is to provide cameras, please provide a specification.	Contractor to relocate existing security camera for relocated security gate per Key Note 4 on drawing 01E02. All other CCTV cameras to be furnished and installed by Owner's Security Contractor as indicated on the Drawings.
30	Is the manway access 304 or 316 SST? (Re:41S04, Detail 2)	The manway access and any other submerged structure in the tank should be 316 SST. Specifications have been updated to reflect this.
31	Hatch supplier says their shoebox style that size is a single door. Is a single door hatch acceptable?	Yes a single door hatch will be acceptable.
32	Are there any Utah DDW requirements on the backwash tank hatch? (i.e. no penetrations)?	Per addendum 1, no surface penetrations are allowed in the backwash tank hatch. This was added to comply with DDW requirements.
33	On Sheet 69M01 there is a 3" PEA line that is called out as stainless. The Piping schedule calls it out all PEA lines as PVC. Please confirm this is stainless, and if it is, what schedule stainless pipe it should be. Sheets 69M02, 69M04, 71M03 & 71M04 also show it as stainless.	The pipe schedule has been updated to reflect the correct piping materials shown on the drawings. See specification 11256 for details.
34	Does filter media and related demolished materials need to be disposed of offsite?	Yes. Per the requirements of 01738 - Selective Alterations and Demolition, paragraph 3.03.A.7 Contractor shall assume possession of demolished materials and remove them from the site. Demolished materials should be disposed of in accordance with Laws and Regulations.

Magnetic Flow Transmitter

PROJECT INFORMATION

PLANT	JORDAN VALLEY WATER TREATMENT PLANT (JVWTP)	**CUSTOMER**	JORDAN VALLEY WATER
PROJECT	202001	**LOCATION**	15305 S 3200 W, HERRIMAN 3200 W, HERRIMAN, UT 84065.

GENERAL NOTE: FIELDS SHOWN WITH THE [*] SYMBOL ARE NOT SHOWN ON THE DATASHEET BUT MAY BE REQUIRED BY THE CONTRACT DOCUMENTS. THE CONTRACTOR SHALL SUBMIT COMPLETE ISA DATASHEETS FOR EACH INSTRUMENT PER ALL SPECIFIED REQUIREMENTS.

GENERAL

TAG	FIT-3011 (FE-3011)	**MEASURING PRINCIPLE**	MAGNETIC
SPECIFICATION NUMBER	17302	**PLC**	RTU-NFL1
DRAWING NUMBER	30N03	**POWER LOCATION**	RTU-NFL1
SERVICE	FILTER 1 EFFLUENT FLOW METER	**TYPICAL DETAIL(S)**	NF130, NF135, NA900

CONNECTION

LINE SIZE	30-IN	**PROCESS CONNECTION**	ANSI 150
LINE MATERIAL	DUCTILE IRON	**PROCESS CONN. MATERIAL**	DUCTILE IRON

FLUID

FLUID	WATER	**PRESSURE**	125 PSI
NOMINAL FLOW	12390 GPM	**TEMPERATURE**	45-65 DEG F
FLOW RANGE	0-12,390 GPM	**VISCOSITY**	1.01
		CONDUCTIVITY	N/A

ELEMENT

ELEMENT TAG NO.	FE-3011	**PROCESS CONNECTION**	ANSI 150
ENCLOSURE CLASS	NEMA 4X	**LINER MATERIAL**	HARD RUBBER
HAZARDOUS APPROVALS	N/A	**VACUUM POSSIBILITY**	NO
TUBE SIZE	30-IN	**ELECTRODE TYPE**	MFR. STD.
TUBE MATERIAL	MFR. STD.	**ELECTRODE MATERIAL**	316 SST

TRANSMITTER

TRANSMITTER TAG NO.	FIT-3011	**HAZARDOUS APPROVALS**	N/A
MOUNTING	REM	**EMPTY PIPE DETECTION**	YES
ENCLOSURE CLASS	NEMA 4X	**BI DIRECTIONAL FLOW**	NO
POWER	24VDC-1P	**PULSE OUTPUT**	NO
AMBIENT TEMPERATURE	0-95 DEG F	**RELAY OPTIONS**	YES
OUTPUT	MODBUS RTU	**POTTED ELECTRONICS**	NO
SURGE PROTECTION	NO	**CATHODIC PROT. LINE**	NO

NOTES

PROVIDE HIGH ACCURACY, ZERO UPSTREAM/DOWNSTREAM FLOW METER/TRANSMITTERS. PROVIDE PHOENIX CONTACT RTU TO MODBUS TCP/IP CONVERTOR.

Magnetic Flow Transmitter

PROJECT INFORMATION

PLANT JORDAN VALLEY WATER TREATMENT PLANT (JVWTP)
PROJECT 202001
CUSTOMER JORDAN VALLEY WATER
LOCATION 15305 S 3200 W, HERRIMAN 3200 W, HERRIMAN, UT 84065.

GENERAL NOTE: FIELDS SHOWN WITH THE [*] SYMBOL ARE NOT SHOWN ON THE DATASHEET BUT MAY BE REQUIRED BY THE CONTRACT DOCUMENTS. THE CONTRACTOR SHALL SUBMIT COMPLETE ISA DATASHEETS FOR EACH INSTRUMENT PER ALL SPECIFIED REQUIREMENTS.

GENERAL

TAG FIT-3021 (FE-3021)
SPECIFICATION NUMBER 17302
DRAWING NUMBER 30N04
SERVICE FILTER 2 EFFLUENT FLOW METER
MEASURING PRINCIPLE MAGNETIC
PLC RTU-SFL2
POWER LOCATION RTU-SFL2
TYPICAL DETAIL(S) NF130, NF135, NA900

CONNECTION

LINE SIZE 30-IN
LINE MATERIAL DUCTILE IRON
PROCESS CONNECTION ANSI 150
PROCESS CONN. MATERIAL DUCTILE IRON

FLUID

FLUID WATER
NOMINAL FLOW 12390 GPM
FLOW RANGE 0-12,390 GPM
PRESSURE 125 PSI
TEMPERATURE 45-65 DEG F
VISCOSITY 1.01
CONDUCTIVITY N/A

ELEMENT

ELEMENT TAG NO. FE-3021
ENCLOSURE CLASS NEMA 4X
HAZARDOUS APPROVALS N/A
TUBE SIZE 30-IN
TUBE MATERIAL MFR. STD.
PROCESS CONNECTION ANSI 150
LINER MATERIAL HARD RUBBER
VACUUM POSSIBILITY NO
ELECTRODE TYPE MFR. STD.
ELECTRODE MATERIAL 316 SST

TRANSMITTER

TRANSMITTER TAG NO. FIT-3021
MOUNTING REM
ENCLOSURE CLASS NEMA 4X
POWER 24VDC-1P
AMBIENT TEMPERATURE 0-95 DEG F
OUTPUT MODBUS RTU
SURGE PROTECTION NO
HAZARDOUS APPROVALS N/A
EMPTY PIPE DETECTION YES
BI DIRECTIONAL FLOW NO
PULSE OUTPUT NO
RELAY OPTIONS YES
POTTED ELECTRONICS NO
CATHODIC PROT. LINE NO

NOTES

PROVIDE HIGH ACCURACY, ZERO UPSTREAM/DOWNSTREAM FLOW METER/TRANSMITTERS. PROVIDE PHOENIX CONTACT RTU TO MODBUS TCP/IP CONVERTOR.

Magnetic Flow Transmitter

PROJECT INFORMATION

PLANT	JORDAN VALLEY WATER TREATMENT PLANT (JVWTP)	**CUSTOMER**	JORDAN VALLEY WATER
PROJECT	202001	**LOCATION**	15305 S 3200 W, HERRIMAN 3200 W, HERRIMAN, UT 84065.

GENERAL NOTE: FIELDS SHOWN WITH THE [*] SYMBOL ARE NOT SHOWN ON THE DATASHEET BUT MAY BE REQUIRED BY THE CONTRACT DOCUMENTS. THE CONTRACTOR SHALL SUBMIT COMPLETE ISA DATASHEETS FOR EACH INSTRUMENT PER ALL SPECIFIED REQUIREMENTS.

GENERAL

TAG	FIT-3031 (FE-3031)	**MEASURING PRINCIPLE**	MAGNETIC
SPECIFICATION NUMBER	17302	**PLC**	RTU-NFL3
DRAWING NUMBER	30N05	**POWER LOCATION**	RTU-NFL3
SERVICE	FILTER 3 EFFLUENT FLOW METER	**TYPICAL DETAIL(S)**	NF130, NF135, NA900

CONNECTION

LINE SIZE	30-IN	**PROCESS CONNECTION**	ANSI 150
LINE MATERIAL	DUCTILE IRON	**PROCESS CONN. MATERIAL**	DUCTILE IRON

FLUID

FLUID	WATER	**PRESSURE**	125 PSI
NOMINAL FLOW	12390 GPM	**TEMPERATURE**	45-65 DEG F
FLOW RANGE	0-12,390 GPM	**VISCOSITY**	1.01
		CONDUCTIVITY	N/A

ELEMENT

ELEMENT TAG NO.	FE-3031	**PROCESS CONNECTION**	ANSI 150
ENCLOSURE CLASS	NEMA 4X	**LINER MATERIAL**	HARD RUBBER
HAZARDOUS APPROVALS	N/A	**VACUUM POSSIBILITY**	NO
TUBE SIZE	30-IN	**ELECTRODE TYPE**	MFR. STD.
TUBE MATERIAL	MFR. STD.	**ELECTRODE MATERIAL**	316 SST

TRANSMITTER

TRANSMITTER TAG NO.	FIT-3031	**HAZARDOUS APPROVALS**	N/A
MOUNTING	REM	**EMPTY PIPE DETECTION**	YES
ENCLOSURE CLASS	NEMA 4X	**BI DIRECTIONAL FLOW**	NO
POWER	24VDC-1P	**PULSE OUTPUT**	NO
AMBIENT TEMPERATURE	0-95 DEG F	**RELAY OPTIONS**	YES
OUTPUT	MODBUS RTU	**POTTED ELECTRONICS**	NO
SURGE PROTECTION	NO	**CATHODIC PROT. LINE**	NO

NOTES

PROVIDE HIGH ACCURACY, ZERO UPSTREAM/DOWNSTREAM FLOW METER/TRANSMITTERS. PROVIDE PHOENIX CONTACT RTU TO MODBUS TCP/IP CONVERTOR.

Magnetic Flow Transmitter

PROJECT INFORMATION

PLANT	JORDAN VALLEY WATER TREATMENT PLANT (JVWTP)	**CUSTOMER**	JORDAN VALLEY WATER
PROJECT	202001	**LOCATION**	15305 S 3200 W, HERRIMAN 3200 W, HERRIMAN, UT 84065.

GENERAL NOTE: FIELDS SHOWN WITH THE [*] SYMBOL ARE NOT SHOWN ON THE DATASHEET BUT MAY BE REQUIRED BY THE CONTRACT DOCUMENTS. THE CONTRACTOR SHALL SUBMIT COMPLETE ISA DATASHEETS FOR EACH INSTRUMENT PER ALL SPECIFIED REQUIREMENTS.

GENERAL

TAG	FIT-3041 (FE-3041)	**MEASURING PRINCIPLE**	MAGNETIC
SPECIFICATION NUMBER	17302	**PLC**	RTU-SFL4
DRAWING NUMBER	30N06	**POWER LOCATION**	RTU-SFL4
SERVICE	FILTER 4 EFFLUENT FLOW METER	**TYPICAL DETAIL(S)**	NF130, NF135, NA900

CONNECTION

LINE SIZE	30-IN	**PROCESS CONNECTION**	ANSI 150
LINE MATERIAL	DUCTILE IRON	**PROCESS CONN. MATERIAL**	DUCTILE IRON

FLUID

FLUID	WATER	**PRESSURE**	125 PSI
NOMINAL FLOW	12390 GPM	**TEMPERATURE**	45-65 DEG F
FLOW RANGE	0-12,390 GPM	**VISCOSITY**	1.01
		CONDUCTIVITY	N/A

ELEMENT

ELEMENT TAG NO.	FE-3041	**PROCESS CONNECTION**	ANSI 150
ENCLOSURE CLASS	NEMA 4X	**LINER MATERIAL**	HARD RUBBER
HAZARDOUS APPROVALS	N/A	**VACUUM POSSIBILITY**	NO
TUBE SIZE	30-IN	**ELECTRODE TYPE**	MFR. STD.
TUBE MATERIAL	MFR. STD.	**ELECTRODE MATERIAL**	316 SST

TRANSMITTER

TRANSMITTER TAG NO.	FIT-3041	**HAZARDOUS APPROVALS**	N/A
MOUNTING	REM	**EMPTY PIPE DETECTION**	YES
ENCLOSURE CLASS	NEMA 4X	**BI DIRECTIONAL FLOW**	NO
POWER	24VDC-1P	**PULSE OUTPUT**	NO
AMBIENT TEMPERATURE	0-95 DEG F	**RELAY OPTIONS**	YES
OUTPUT	MODBUS RTU	**POTTED ELECTRONICS**	NO
SURGE PROTECTION	NO	**CATHODIC PROT. LINE**	NO

NOTES

PROVIDE HIGH ACCURACY, ZERO UPSTREAM/DOWNSTREAM FLOW METER/TRANSMITTERS. PROVIDE PHOENIX CONTACT RTU TO MODBUS TCP/IP CONVERTOR.

Magnetic Flow Transmitter

PROJECT INFORMATION

PLANT	JORDAN VALLEY WATER TREATMENT PLANT (JVWTP)	**CUSTOMER**	JORDAN VALLEY WATER
PROJECT	202001	**LOCATION**	15305 S 3200 W, HERRIMAN 3200 W, HERRIMAN, UT 84065.

GENERAL NOTE: FIELDS SHOWN WITH THE [*] SYMBOL ARE NOT SHOWN ON THE DATASHEET BUT MAY BE REQUIRED BY THE CONTRACT DOCUMENTS. THE CONTRACTOR SHALL SUBMIT COMPLETE ISA DATASHEETS FOR EACH INSTRUMENT PER ALL SPECIFIED REQUIREMENTS.

GENERAL

TAG	FIT-3051 (FE-3051)	**MEASURING PRINCIPLE**	MAGNETIC
SPECIFICATION NUMBER	17302	**PLC**	RTU-NFL5
DRAWING NUMBER	30N07	**POWER LOCATION**	RTU-NFL5
SERVICE	FILTER 5 EFFLUENT FLOW METER	**TYPICAL DETAIL(S)**	NF130, NF135, NA900

CONNECTION

LINE SIZE	30-IN	**PROCESS CONNECTION**	ANSI 150
LINE MATERIAL	DUCTILE IRON	**PROCESS CONN. MATERIAL**	DUCTILE IRON

FLUID

FLUID	WATER	**PRESSURE**	125 PSI
NOMINAL FLOW	12390 GPM	**TEMPERATURE**	45-65 DEG F
FLOW RANGE	0-12,390 GPM	**VISCOSITY**	1.01
		CONDUCTIVITY	N/A

ELEMENT

ELEMENT TAG NO.	FE-3051	**PROCESS CONNECTION**	ANSI 150
ENCLOSURE CLASS	NEMA 4X	**LINER MATERIAL**	HARD RUBBER
HAZARDOUS APPROVALS	N/A	**VACUUM POSSIBILITY**	NO
TUBE SIZE	30-IN	**ELECTRODE TYPE**	MFR. STD.
TUBE MATERIAL	MFR. STD.	**ELECTRODE MATERIAL**	316 SST

TRANSMITTER

TRANSMITTER TAG NO.	FIT-3051	**HAZARDOUS APPROVALS**	N/A
MOUNTING	REM	**EMPTY PIPE DETECTION**	YES
ENCLOSURE CLASS	NEMA 4X	**BI DIRECTIONAL FLOW**	NO
POWER	24VDC-1P	**PULSE OUTPUT**	NO
AMBIENT TEMPERATURE	0-95 DEG F	**RELAY OPTIONS**	YES
OUTPUT	MODBUS RTU	**POTTED ELECTRONICS**	NO
SURGE PROTECTION	NO	**CATHODIC PROT. LINE**	NO

NOTES

PROVIDE HIGH ACCURACY, ZERO UPSTREAM/DOWNSTREAM FLOW METER/TRANSMITTERS. PROVIDE PHOENIX CONTACT RTU TO MODBUS TCP/IP CONVERTOR.

Magnetic Flow Transmitter

PROJECT INFORMATION

PLANT	JORDAN VALLEY WATER TREATMENT PLANT (JVWTP)	**CUSTOMER**	JORDAN VALLEY WATER
PROJECT	202001	**LOCATION**	15305 S 3200 W, HERRIMAN 3200 W, HERRIMAN, UT 84065.

GENERAL NOTE: FIELDS SHOWN WITH THE [*] SYMBOL ARE NOT SHOWN ON THE DATASHEET BUT MAY BE REQUIRED BY THE CONTRACT DOCUMENTS. THE CONTRACTOR SHALL SUBMIT COMPLETE ISA DATASHEETS FOR EACH INSTRUMENT PER ALL SPECIFIED REQUIREMENTS.

GENERAL

TAG	FIT-3061 (FE-3061)	**MEASURING PRINCIPLE**	MAGNETIC
SPECIFICATION NUMBER	17302	**PLC**	RTU-SFL6
DRAWING NUMBER	30N08	**POWER LOCATION**	RTU-SFL6
SERVICE	FILTER 6 EFFLUENT FLOW METER	**TYPICAL DETAIL(S)**	NF130, NF135, NA900

CONNECTION

LINE SIZE	30-IN	**PROCESS CONNECTION**	ANSI 150
LINE MATERIAL	DUCTILE IRON	**PROCESS CONN. MATERIAL**	DUCTILE IRON

FLUID

FLUID	WATER	**PRESSURE**	125 PSI
NOMINAL FLOW	12390 GPM	**TEMPERATURE**	45-65 DEG F
FLOW RANGE	0-12,390 GPM	**VISCOSITY**	1.01
		CONDUCTIVITY	N/A

ELEMENT

ELEMENT TAG NO.	FE-3061	**PROCESS CONNECTION**	ANSI 150
ENCLOSURE CLASS	NEMA 4X	**LINER MATERIAL**	HARD RUBBER
HAZARDOUS APPROVALS	N/A	**VACUUM POSSIBILITY**	NO
TUBE SIZE	30-IN	**ELECTRODE TYPE**	MFR. STD.
TUBE MATERIAL	MFR. STD.	**ELECTRODE MATERIAL**	316 SST

TRANSMITTER

TRANSMITTER TAG NO.	FIT-3061	**HAZARDOUS APPROVALS**	N/A
MOUNTING	REM	**EMPTY PIPE DETECTION**	YES
ENCLOSURE CLASS	NEMA 4X	**BI DIRECTIONAL FLOW**	NO
POWER	24VDC-1P	**PULSE OUTPUT**	NO
AMBIENT TEMPERATURE	0-95 DEG F	**RELAY OPTIONS**	YES
OUTPUT	MODBUS RTU	**POTTED ELECTRONICS**	NO
SURGE PROTECTION	NO	**CATHODIC PROT. LINE**	NO

NOTES

PROVIDE HIGH ACCURACY, ZERO UPSTREAM/DOWNSTREAM FLOW METER/TRANSMITTERS. PROVIDE PHOENIX CONTACT RTU TO MODBUS TCP/IP CONVERTOR.

Magnetic Flow Transmitter

PROJECT INFORMATION

PLANT JORDAN VALLEY WATER TREATMENT PLANT (JVWTP)
PROJECT 202001
CUSTOMER JORDAN VALLEY WATER
LOCATION 15305 S 3200 W, HERRIMAN 3200 W, HERRIMAN, UT 84065.

GENERAL NOTE: FIELDS SHOWN WITH THE [*] SYMBOL ARE NOT SHOWN ON THE DATASHEET BUT MAY BE REQUIRED BY THE CONTRACT DOCUMENTS. THE CONTRACTOR SHALL SUBMIT COMPLETE ISA DATASHEETS FOR EACH INSTRUMENT PER ALL SPECIFIED REQUIREMENTS.

GENERAL

TAG FIT-3071 (FE-3071)
SPECIFICATION NUMBER 17302
DRAWING NUMBER 30N09
SERVICE FILTER 7 EFFLUENT FLOW METER
MEASURING PRINCIPLE MAGNETIC
PLC RTU-NFL7
POWER LOCATION RTU-NFL7
TYPICAL DETAIL(S) NF130, NF135, NA900

CONNECTION

LINE SIZE 30-IN
LINE MATERIAL DUCTILE IRON
PROCESS CONNECTION ANSI 150
PROCESS CONN. MATERIAL DUCTILE IRON

FLUID

FLUID WATER
NOMINAL FLOW 12390 GPM
FLOW RANGE 0-12,390 GPM
PRESSURE 125 PSI
TEMPERATURE 45-65 DEG F
VISCOSITY 1.01
CONDUCTIVITY N/A

ELEMENT

ELEMENT TAG NO. FE-3071
ENCLOSURE CLASS NEMA 4X
HAZARDOUS APPROVALS N/A
TUBE SIZE 30-IN
TUBE MATERIAL MFR. STD.
PROCESS CONNECTION ANSI 150
LINER MATERIAL HARD RUBBER
VACUUM POSSIBILITY NO
ELECTRODE TYPE MFR. STD.
ELECTRODE MATERIAL 316 SST

TRANSMITTER

TRANSMITTER TAG NO. FIT-3071
MOUNTING REM
ENCLOSURE CLASS NEMA 4X
POWER 24VDC-1P
AMBIENT TEMPERATURE 0-95 DEG F
OUTPUT MODBUS RTU
SURGE PROTECTION NO
HAZARDOUS APPROVALS N/A
EMPTY PIPE DETECTION YES
BI DIRECTIONAL FLOW NO
PULSE OUTPUT NO
RELAY OPTIONS YES
POTTED ELECTRONICS NO
CATHODIC PROT. LINE NO

NOTES

PROVIDE HIGH ACCURACY, ZERO UPSTREAM/DOWNSTREAM FLOW METER/TRANSMITTERS. PROVIDE PHOENIX CONTACT RTU TO MODBUS TCP/IP CONVERTOR.

Magnetic Flow Transmitter

PROJECT INFORMATION

PLANT JORDAN VALLEY WATER TREATMENT PLANT (JVWTP)
PROJECT 202001
CUSTOMER JORDAN VALLEY WATER
LOCATION 15305 S 3200 W, HERRIMAN 3200 W, HERRIMAN, UT 84065.

GENERAL NOTE: FIELDS SHOWN WITH THE [*] SYMBOL ARE NOT SHOWN ON THE DATASHEET BUT MAY BE REQUIRED BY THE CONTRACT DOCUMENTS. THE CONTRACTOR SHALL SUBMIT COMPLETE ISA DATASHEETS FOR EACH INSTRUMENT PER ALL SPECIFIED REQUIREMENTS.

GENERAL

TAG FIT-3081 (FE-3081)
SPECIFICATION NUMBER 17302
DRAWING NUMBER 30N10
SERVICE FILTER 8 EFFLUENT FLOW METER
MEASURING PRINCIPLE MAGNETIC
PLC RTU-SFL8
POWER LOCATION RTU-SFL8
TYPICAL DETAIL(S) NF130, NF135, NA900

CONNECTION

LINE SIZE 30-IN
LINE MATERIAL DUCTILE IRON
PROCESS CONNECTION ANSI 150
PROCESS CONN. MATERIAL DUCTILE IRON

FLUID

FLUID WATER
NOMINAL FLOW 12390 GPM
FLOW RANGE 0-12,390 GPM
PRESSURE 125 PSI
TEMPERATURE 45-65 DEG F
VISCOSITY 1.01
CONDUCTIVITY N/A

ELEMENT

ELEMENT TAG NO. FE-3081
ENCLOSURE CLASS NEMA 4X
HAZARDOUS APPROVALS N/A
TUBE SIZE 30-IN
TUBE MATERIAL MFR. STD.
PROCESS CONNECTION ANSI 150
LINER MATERIAL HARD RUBBER
VACUUM POSSIBILITY NO
ELECTRODE TYPE MFR. STD.
ELECTRODE MATERIAL 316 SST

TRANSMITTER

TRANSMITTER TAG NO. FIT-3081
MOUNTING REM
ENCLOSURE CLASS NEMA 4X
POWER 24VDC-1P
AMBIENT TEMPERATURE 0-95 DEG F
OUTPUT MODBUS RTU
SURGE PROTECTION NO
HAZARDOUS APPROVALS N/A
EMPTY PIPE DETECTION YES
BI DIRECTIONAL FLOW NO
PULSE OUTPUT NO
RELAY OPTIONS YES
POTTED ELECTRONICS NO
CATHODIC PROT. LINE NO

NOTES

PROVIDE HIGH ACCURACY, ZERO UPSTREAM/DOWNSTREAM FLOW METER/TRANSMITTERS. PROVIDE PHOENIX CONTACT RTU TO MODBUS TCP/IP CONVERTOR.

Magnetic Flow Transmitter

PROJECT INFORMATION

PLANT JORDAN VALLEY WATER TREATMENT PLANT (JVWTP)
PROJECT 202001
CUSTOMER JORDAN VALLEY WATER
LOCATION 15305 S 3200 W, HERRIMAN 3200 W, HERRIMAN, UT 84065.

GENERAL NOTE: FIELDS SHOWN WITH THE [*] SYMBOL ARE NOT SHOWN ON THE DATASHEET BUT MAY BE REQUIRED BY THE CONTRACT DOCUMENTS. THE CONTRACTOR SHALL SUBMIT COMPLETE ISA DATASHEETS FOR EACH INSTRUMENT PER ALL SPECIFIED REQUIREMENTS.

GENERAL

TAG FIT-3091 (FE-3091)
SPECIFICATION NUMBER 17302
DRAWING NUMBER 30N11
SERVICE FILTER 9 EFFLUENT FLOW METER
MEASURING PRINCIPLE MAGNETIC
PLC RTU-NFL9
POWER LOCATION RTU-NFL9
TYPICAL DETAIL(S) NF130, NF135, NA900

CONNECTION

LINE SIZE 30-IN
LINE MATERIAL DUCTILE IRON
PROCESS CONNECTION ANSI 150
PROCESS CONN. MATERIAL DUCTILE IRON

FLUID

FLUID WATER
NOMINAL FLOW 12390 GPM
FLOW RANGE 0-12,390 GPM
PRESSURE 125 PSI
TEMPERATURE 45-65 DEG F
VISCOSITY 1.01
CONDUCTIVITY N/A

ELEMENT

ELEMENT TAG NO. FE-3091
ENCLOSURE CLASS NEMA 4X
HAZARDOUS APPROVALS N/A
TUBE SIZE 30-IN
TUBE MATERIAL MFR. STD.
PROCESS CONNECTION ANSI 150
LINER MATERIAL HARD RUBBER
VACUUM POSSIBILITY NO
ELECTRODE TYPE MFR. STD.
ELECTRODE MATERIAL 316 SST

TRANSMITTER

TRANSMITTER TAG NO. FIT-3091
MOUNTING REM
ENCLOSURE CLASS NEMA 4X
POWER 24VDC-1P
AMBIENT TEMPERATURE 0-95 DEG F
OUTPUT MODBUS RTU
SURGE PROTECTION NO
HAZARDOUS APPROVALS N/A
EMPTY PIPE DETECTION YES
BI DIRECTIONAL FLOW NO
PULSE OUTPUT NO
RELAY OPTIONS YES
POTTED ELECTRONICS NO
CATHODIC PROT. LINE NO

NOTES

PROVIDE HIGH ACCURACY, ZERO UPSTREAM/DOWNSTREAM FLOW METER/TRANSMITTERS. PROVIDE PHOENIX CONTACT RTU TO MODBUS TCP/IP CONVERTOR.

Magnetic Flow Transmitter

PROJECT INFORMATION

PLANT JORDAN VALLEY WATER TREATMENT PLANT (JVWTP)

PROJECT 202001

CUSTOMER JORDAN VALLEY WATER

LOCATION 15305 S 3200 W, HERRIMAN 3200 W, HERRIMAN, UT 84065.

GENERAL NOTE: FIELDS SHOWN WITH THE [*] SYMBOL ARE NOT SHOWN ON THE DATASHEET BUT MAY BE REQUIRED BY THE CONTRACT DOCUMENTS. THE CONTRACTOR SHALL SUBMIT COMPLETE ISA DATASHEETS FOR EACH INSTRUMENT PER ALL SPECIFIED REQUIREMENTS.

GENERAL

TAG FIT-3101 (FE-3101)
SPECIFICATION NUMBER 17302
DRAWING NUMBER 30N12
SERVICE FILTER 10 EFFLUENT FLOW METER

MEASURING PRINCIPLE MAGNETIC
PLC RTU-SFL10
POWER LOCATION RTU-SFL10
TYPICAL DETAIL(S) NF130, NF135, NA900

CONNECTION

LINE SIZE 30-IN
LINE MATERIAL DUCTILE IRON

PROCESS CONNECTION ANSI 150
PROCESS CONN. MATERIAL DUCTILE IRON

FLUID

FLUID WATER
NOMINAL FLOW 12390 GPM
FLOW RANGE 0-12,390 GPM

PRESSURE 125 PSI
TEMPERATURE 45-65 DEG F
VISCOSITY 1.01
CONDUCTIVITY N/A

ELEMENT

ELEMENT TAG NO. FE-3101
ENCLOSURE CLASS NEMA 4X
HAZARDOUS APPROVALS N/A
TUBE SIZE 30-IN
TUBE MATERIAL MFR. STD.

PROCESS CONNECTION ANSI 150
LINER MATERIAL HARD RUBBER
VACUUM POSSIBILITY NO
ELECTRODE TYPE MFR. STD.
ELECTRODE MATERIAL 316 SST

TRANSMITTER

TRANSMITTER TAG NO. FIT-3101
MOUNTING REM
ENCLOSURE CLASS NEMA 4X
POWER 24VDC-1P
AMBIENT TEMPERATURE 0-95 DEG F
OUTPUT MODBUS RTU
SURGE PROTECTION NO

HAZARDOUS APPROVALS N/A
EMPTY PIPE DETECTION YES
BI DIRECTIONAL FLOW NO
PULSE OUTPUT NO
RELAY OPTIONS YES
POTTED ELECTRONICS NO
CATHODIC PROT. LINE NO

NOTES

PROVIDE HIGH ACCURACY, ZERO UPSTREAM/DOWNSTREAM FLOW METER/TRANSMITTERS. PROVIDE PHOENIX CONTACT RTU TO MODBUS TCP/IP CONVERTOR.

Magnetic Flow Transmitter

PROJECT INFORMATION

PLANT JORDAN VALLEY WATER TREATMENT PLANT (JVWTP)
PROJECT 202001
CUSTOMER JORDAN VALLEY WATER
LOCATION 15305 S 3200 W, HERRIMAN 3200 W, HERRIMAN, UT 84065.

GENERAL NOTE: FIELDS SHOWN WITH THE [*] SYMBOL ARE NOT SHOWN ON THE DATASHEET BUT MAY BE REQUIRED BY THE CONTRACT DOCUMENTS. THE CONTRACTOR SHALL SUBMIT COMPLETE ISA DATASHEETS FOR EACH INSTRUMENT PER ALL SPECIFIED REQUIREMENTS.

GENERAL

TAG FIT-3111 (FE-3111)
SPECIFICATION NUMBER 17302
DRAWING NUMBER 30N13
SERVICE FILTER 11 EFFLUENT FLOW METER
MEASURING PRINCIPLE MAGNETIC
PLC RTU-NFL11
POWER LOCATION RTU-NFL11
TYPICAL DETAIL(S) NF130, NF135, NA900

CONNECTION

LINE SIZE 30-IN
LINE MATERIAL DUCTILE IRON
PROCESS CONNECTION ANSI 150
PROCESS CONN. MATERIAL DUCTILE IRON

FLUID

FLUID WATER
NOMINAL FLOW 12390 GPM
FLOW RANGE 0-12,390 GPM
PRESSURE 125 PSI
TEMPERATURE 45-65 DEG F
VISCOSITY 1.01
CONDUCTIVITY N/A

ELEMENT

ELEMENT TAG NO. FE-3111
ENCLOSURE CLASS NEMA 4X
HAZARDOUS APPROVALS N/A
TUBE SIZE 30-IN
TUBE MATERIAL MFR. STD.
PROCESS CONNECTION ANSI 150
LINER MATERIAL HARD RUBBER
VACUUM POSSIBILITY NO
ELECTRODE TYPE MFR. STD.
ELECTRODE MATERIAL 316 SST

TRANSMITTER

TRANSMITTER TAG NO. FIT-3111
MOUNTING REM
ENCLOSURE CLASS NEMA 4X
POWER 24VDC-1P
AMBIENT TEMPERATURE 0-95 DEG F
OUTPUT MODBUS RTU
SURGE PROTECTION NO
HAZARDOUS APPROVALS N/A
EMPTY PIPE DETECTION YES
BI DIRECTIONAL FLOW NO
PULSE OUTPUT NO
RELAY OPTIONS YES
POTTED ELECTRONICS NO
CATHODIC PROT. LINE NO

NOTES

PROVIDE HIGH ACCURACY, ZERO UPSTREAM/DOWNSTREAM FLOW METER/TRANSMITTERS. PROVIDE PHOENIX CONTACT RTU TO MODBUS TCP/IP CONVERTOR.

Magnetic Flow Transmitter

PROJECT INFORMATION

PLANT JORDAN VALLEY WATER TREATMENT PLANT (JVWTP)
PROJECT 202001
CUSTOMER JORDAN VALLEY WATER
LOCATION 15305 S 3200 W, HERRIMAN 3200 W, HERRIMAN, UT 84065.

GENERAL NOTE: FIELDS SHOWN WITH THE [*] SYMBOL ARE NOT SHOWN ON THE DATASHEET BUT MAY BE REQUIRED BY THE CONTRACT DOCUMENTS. THE CONTRACTOR SHALL SUBMIT COMPLETE ISA DATASHEETS FOR EACH INSTRUMENT PER ALL SPECIFIED REQUIREMENTS.

GENERAL

TAG FIT-3121 (FE-3121)
SPECIFICATION NUMBER 17302
DRAWING NUMBER 30N14
SERVICE FILTER 12 EFFLUENT FLOW METER
MEASURING PRINCIPLE MAGNETIC
PLC RTU-SFL12
POWER LOCATION RTU-SFL12
TYPICAL DETAIL(S) NF130, NF135, NA900

CONNECTION

LINE SIZE 30-IN
LINE MATERIAL DUCTILE IRON
PROCESS CONNECTION ANSI 150
PROCESS CONN. MATERIAL DUCTILE IRON

FLUID

FLUID WATER
NOMINAL FLOW 12390 GPM
FLOW RANGE 0-12,390 GPM
PRESSURE 125 PSI
TEMPERATURE 45-65 DEG F
VISCOSITY 1.01
CONDUCTIVITY N/A

ELEMENT

ELEMENT TAG NO. FE-3121
ENCLOSURE CLASS NEMA 4X
HAZARDOUS APPROVALS N/A
TUBE SIZE 30-IN
TUBE MATERIAL MFR. STD.
PROCESS CONNECTION ANSI 150
LINER MATERIAL HARD RUBBER
VACUUM POSSIBILITY NO
ELECTRODE TYPE MFR. STD.
ELECTRODE MATERIAL 316 SST

TRANSMITTER

TRANSMITTER TAG NO. FIT-3121
MOUNTING REM
ENCLOSURE CLASS NEMA 4X
POWER 24VDC-1P
AMBIENT TEMPERATURE 0-95 DEG F
OUTPUT MODBUS RTU
SURGE PROTECTION NO
HAZARDOUS APPROVALS N/A
EMPTY PIPE DETECTION YES
BI DIRECTIONAL FLOW NO
PULSE OUTPUT NO
RELAY OPTIONS YES
POTTED ELECTRONICS NO
CATHODIC PROT. LINE NO

NOTES

PROVIDE HIGH ACCURACY, ZERO UPSTREAM/DOWNSTREAM FLOW METER/TRANSMITTERS. PROVIDE PHOENIX CONTACT RTU TO MODBUS TCP/IP CONVERTOR.

Magnetic Flow Transmitter

PROJECT INFORMATION

PLANT JORDAN VALLEY WATER TREATMENT PLANT (JVWTP)
PROJECT 202001
CUSTOMER JORDAN VALLEY WATER
LOCATION 15305 S 3200 W, HERRIMAN 3200 W, HERRIMAN, UT 84065.

GENERAL NOTE: FIELDS SHOWN WITH THE [*] SYMBOL ARE NOT SHOWN ON THE DATASHEET BUT MAY BE REQUIRED BY THE CONTRACT DOCUMENTS. THE CONTRACTOR SHALL SUBMIT COMPLETE ISA DATASHEETS FOR EACH INSTRUMENT PER ALL SPECIFIED REQUIREMENTS.

GENERAL

TAG FIT-3131 (FE-3131)
SPECIFICATION NUMBER 17302
DRAWING NUMBER 30N15
SERVICE FILTER 13 EFFLUENT FLOW METER
MEASURING PRINCIPLE MAGNETIC
PLC RTU-NFL13
POWER LOCATION RTU-NFL13
TYPICAL DETAIL(S) NF130, NF135, NA900

CONNECTION

LINE SIZE 30-IN
LINE MATERIAL DUCTILE IRON
PROCESS CONNECTION ANSI 150
PROCESS CONN. MATERIAL DUCTILE IRON

FLUID

FLUID WATER
NOMINAL FLOW 12390 GPM
FLOW RANGE 0-12,390 GPM
PRESSURE 125 PSI
TEMPERATURE 45-65 DEG F
VISCOSITY 1.01
CONDUCTIVITY N/A

ELEMENT

ELEMENT TAG NO. FE-3131
ENCLOSURE CLASS NEMA 4X
HAZARDOUS APPROVALS N/A
TUBE SIZE 30-IN
TUBE MATERIAL MFR. STD.
PROCESS CONNECTION ANSI 150
LINER MATERIAL HARD RUBBER
VACUUM POSSIBILITY NO
ELECTRODE TYPE MFR. STD.
ELECTRODE MATERIAL 316 SST

TRANSMITTER

TRANSMITTER TAG NO. FIT-3131
MOUNTING REM
ENCLOSURE CLASS NEMA 4X
POWER 24VDC-1P
AMBIENT TEMPERATURE 0-95 DEG F
OUTPUT MODBUS RTU
SURGE PROTECTION NO
HAZARDOUS APPROVALS N/A
EMPTY PIPE DETECTION YES
BI DIRECTIONAL FLOW NO
PULSE OUTPUT NO
RELAY OPTIONS YES
POTTED ELECTRONICS NO
CATHODIC PROT. LINE NO

NOTES

PROVIDE HIGH ACCURACY, ZERO UPSTREAM/DOWNSTREAM FLOW METER/TRANSMITTERS. PROVIDE PHOENIX CONTACT RTU TO MODBUS TCP/IP CONVERTOR.

Magnetic Flow Transmitter

PROJECT INFORMATION

PLANT JORDAN VALLEY WATER TREATMENT PLANT (JVWTP)
PROJECT 202001
CUSTOMER JORDAN VALLEY WATER
LOCATION 15305 S 3200 W, HERRIMAN 3200 W, HERRIMAN, UT 84065.

GENERAL NOTE: FIELDS SHOWN WITH THE [*] SYMBOL ARE NOT SHOWN ON THE DATASHEET BUT MAY BE REQUIRED BY THE CONTRACT DOCUMENTS. THE CONTRACTOR SHALL SUBMIT COMPLETE ISA DATASHEETS FOR EACH INSTRUMENT PER ALL SPECIFIED REQUIREMENTS.

GENERAL

TAG FIT-3141 (FE-3141)
SPECIFICATION NUMBER 17302
DRAWING NUMBER 30N16
SERVICE FILTER 14 EFFLUENT FLOW METER
MEASURING PRINCIPLE MAGNETIC
PLC RTU-SFL14
POWER LOCATION RTU-SFL14
TYPICAL DETAIL(S) NF130, NF135, NA900

CONNECTION

LINE SIZE 30-IN
LINE MATERIAL DUCTILE IRON
PROCESS CONNECTION ANSI 150
PROCESS CONN. MATERIAL DUCTILE IRON

FLUID

FLUID WATER
NOMINAL FLOW 12390 GPM
FLOW RANGE 0-12,390 GPM
PRESSURE 125 PSI
TEMPERATURE 45-65 DEG F
VISCOSITY 1.01
CONDUCTIVITY N/A

ELEMENT

ELEMENT TAG NO. FE-3141
ENCLOSURE CLASS NEMA 4X
HAZARDOUS APPROVALS N/A
TUBE SIZE 30-IN
TUBE MATERIAL MFR. STD.
PROCESS CONNECTION ANSI 150
LINER MATERIAL HARD RUBBER
VACUUM POSSIBILITY NO
ELECTRODE TYPE MFR. STD.
ELECTRODE MATERIAL 316 SST

TRANSMITTER

TRANSMITTER TAG NO. FIT-3141
MOUNTING REM
ENCLOSURE CLASS NEMA 4X
POWER 24VDC-1P
AMBIENT TEMPERATURE 0-95 DEG F
OUTPUT MODBUS RTU
SURGE PROTECTION NO
HAZARDOUS APPROVALS N/A
EMPTY PIPE DETECTION YES
BI DIRECTIONAL FLOW NO
PULSE OUTPUT NO
RELAY OPTIONS YES
POTTED ELECTRONICS NO
CATHODIC PROT. LINE NO

NOTES

PROVIDE HIGH ACCURACY, ZERO UPSTREAM/DOWNSTREAM FLOW METER/TRANSMITTERS. PROVIDE PHOENIX CONTACT RTU TO MODBUS TCP/IP CONVERTOR.

Magnetic Flow Transmitter

PROJECT INFORMATION

PLANT	JORDAN VALLEY WATER TREATMENT PLANT (JVWTP)	**CUSTOMER**	JORDAN VALLEY WATER
PROJECT	202001	**LOCATION**	15305 S 3200 W, HERRIMAN 3200 W, HERRIMAN, UT 84065.

GENERAL NOTE: FIELDS SHOWN WITH THE [*] SYMBOL ARE NOT SHOWN ON THE DATASHEET BUT MAY BE REQUIRED BY THE CONTRACT DOCUMENTS. THE CONTRACTOR SHALL SUBMIT COMPLETE ISA DATASHEETS FOR EACH INSTRUMENT PER ALL SPECIFIED REQUIREMENTS.

GENERAL

TAG	FIT-3151 (FE-3151)	**MEASURING PRINCIPLE**	MAGNETIC
SPECIFICATION NUMBER	17302	**PLC**	RTU-NFL15
DRAWING NUMBER	30N17	**POWER LOCATION**	RTU-NFL15
SERVICE	FILTER 15 EFFLUENT FLOW METER	**TYPICAL DETAIL(S)**	NF130, NF135, NA900

CONNECTION

LINE SIZE	30-IN	**PROCESS CONNECTION**	ANSI 150
LINE MATERIAL	DUCTILE IRON	**PROCESS CONN. MATERIAL**	DUCTILE IRON

FLUID

FLUID	WATER	**PRESSURE**	125 PSI
NOMINAL FLOW	12390 GPM	**TEMPERATURE**	45-65 DEG F
FLOW RANGE	0-12,390 GPM	**VISCOSITY**	1.01
		CONDUCTIVITY	N/A

ELEMENT

ELEMENT TAG NO.	FE-3151	**PROCESS CONNECTION**	ANSI 150
ENCLOSURE CLASS	NEMA 4X	**LINER MATERIAL**	HARD RUBBER
HAZARDOUS APPROVALS	N/A	**VACUUM POSSIBILITY**	NO
TUBE SIZE	30-IN	**ELECTRODE TYPE**	MFR. STD.
TUBE MATERIAL	MFR. STD.	**ELECTRODE MATERIAL**	316 SST

TRANSMITTER

TRANSMITTER TAG NO.	FIT-3151	**HAZARDOUS APPROVALS**	N/A
MOUNTING	REM	**EMPTY PIPE DETECTION**	YES
ENCLOSURE CLASS	NEMA 4X	**BI DIRECTIONAL FLOW**	NO
POWER	24VDC-1P	**PULSE OUTPUT**	NO
AMBIENT TEMPERATURE	0-95 DEG F	**RELAY OPTIONS**	YES
OUTPUT	MODBUS RTU	**POTTED ELECTRONICS**	NO
SURGE PROTECTION	NO	**CATHODIC PROT. LINE**	NO

NOTES

PROVIDE HIGH ACCURACY, ZERO UPSTREAM/DOWNSTREAM FLOW METER/TRANSMITTERS. PROVIDE PHOENIX CONTACT RTU TO MODBUS TCP/IP CONVERTOR.

Magnetic Flow Transmitter

PROJECT INFORMATION

PLANT JORDAN VALLEY WATER TREATMENT PLANT (JVWTP)
PROJECT 202001
CUSTOMER JORDAN VALLEY WATER
LOCATION 15305 S 3200 W, HERRIMAN 3200 W, HERRIMAN, UT 84065.

GENERAL NOTE: FIELDS SHOWN WITH THE [*] SYMBOL ARE NOT SHOWN ON THE DATASHEET BUT MAY BE REQUIRED BY THE CONTRACT DOCUMENTS. THE CONTRACTOR SHALL SUBMIT COMPLETE ISA DATASHEETS FOR EACH INSTRUMENT PER ALL SPECIFIED REQUIREMENTS.

GENERAL

TAG FIT-3161 (FE-3161)
SPECIFICATION NUMBER 17302
DRAWING NUMBER 30N18
SERVICE FILTER 16 EFFLUENT FLOW METER
MEASURING PRINCIPLE MAGNETIC
PLC RTU-SFL16
POWER LOCATION RTU-SFL16
TYPICAL DETAIL(S) NF130, NF135, NA900

CONNECTION

LINE SIZE 30-IN
LINE MATERIAL DUCTILE IRON
PROCESS CONNECTION ANSI 150
PROCESS CONN. MATERIAL DUCTILE IRON

FLUID

FLUID WATER
NOMINAL FLOW 12390 GPM
FLOW RANGE 0-12,390 GPM
PRESSURE 125 PSI
TEMPERATURE 45-65 DEG F
VISCOSITY 1.01
CONDUCTIVITY N/A

ELEMENT

ELEMENT TAG NO. FE-3161
ENCLOSURE CLASS NEMA 4X
HAZARDOUS APPROVALS N/A
TUBE SIZE 30-IN
TUBE MATERIAL MFR. STD.
PROCESS CONNECTION ANSI 150
LINER MATERIAL HARD RUBBER
VACUUM POSSIBILITY NO
ELECTRODE TYPE MFR. STD.
ELECTRODE MATERIAL 316 SST

TRANSMITTER

TRANSMITTER TAG NO. FIT-3161
MOUNTING REM
ENCLOSURE CLASS NEMA 4X
POWER 24VDC-1P
AMBIENT TEMPERATURE 0-95 DEG F
OUTPUT MODBUS RTU
SURGE PROTECTION NO
HAZARDOUS APPROVALS N/A
EMPTY PIPE DETECTION YES
BI DIRECTIONAL FLOW NO
PULSE OUTPUT NO
RELAY OPTIONS YES
POTTED ELECTRONICS NO
CATHODIC PROT. LINE NO

NOTES

PROVIDE HIGH ACCURACY, ZERO UPSTREAM/DOWNSTREAM FLOW METER/TRANSMITTERS. PROVIDE PHOENIX CONTACT RTU TO MODBUS TCP/IP CONVERTOR.

Magnetic Flow Transmitter

PROJECT INFORMATION

PLANT	JORDAN VALLEY WATER TREATMENT PLANT (JVWTP)	**CUSTOMER**	JORDAN VALLEY WATER
PROJECT	202001	**LOCATION**	15305 S 3200 W, HERRIMAN 3200 W, HERRIMAN, UT 84065.

GENERAL NOTE: FIELDS SHOWN WITH THE [*] SYMBOL ARE NOT SHOWN ON THE DATASHEET BUT MAY BE REQUIRED BY THE CONTRACT DOCUMENTS. THE CONTRACTOR SHALL SUBMIT COMPLETE ISA DATASHEETS FOR EACH INSTRUMENT PER ALL SPECIFIED REQUIREMENTS.

GENERAL

TAG	FIT-4041 (FE-4041)	**MEASURING PRINCIPLE**	MAGNETIC
SPECIFICATION NUMBER	17302	**PLC**	RTU-ELEC2C
DRAWING NUMBER	30N21	**POWER LOCATION**	RTU-ELEC2C
SERVICE	BACKWASH SUPPLY FLOW METER	**TYPICAL DETAIL(S)**	NF130, NF135, NA900

CONNECTION

LINE SIZE	30-IN	**PROCESS CONNECTION**	ANSI 150
LINE MATERIAL	DUCTILE IRON	**PROCESS CONN. MATERIAL**	DUCTILE IRON

FLUID

FLUID	WATER	**PRESSURE**	125 PSI
NOMINAL FLOW	2500 GPM	**TEMPERATURE**	45-65 DEG F
FLOW RANGE	0-30000 GPM	**VISCOSITY**	1.01
		CONDUCTIVITY	N/A

ELEMENT

ELEMENT TAG NO.	FE-4041	**PROCESS CONNECTION**	ANSI 150
ENCLOSURE CLASS	NEMA 4X	**LINER MATERIAL**	HARD RUBBER
HAZARDOUS APPROVALS	N/A	**VACUUM POSSIBILITY**	NO
TUBE SIZE	30-IN	**ELECTRODE TYPE**	MFR. STD.
TUBE MATERIAL	MFR. STD.	**ELECTRODE MATERIAL**	316 SST

TRANSMITTER

TRANSMITTER TAG NO.	FIT-4041	**HAZARDOUS APPROVALS**	N/A
MOUNTING	REM	**EMPTY PIPE DETECTION**	YES
ENCLOSURE CLASS	NEMA 4X	**BI DIRECTIONAL FLOW**	NO
POWER	24VDC-1P	**PULSE OUTPUT**	NO
AMBIENT TEMPERATURE	0-95 DEG F	**RELAY OPTIONS**	YES
OUTPUT	4-20 MA	**POTTED ELECTRONICS**	NO
SURGE PROTECTION	YES	**CATHODIC PROT. LINE**	NO

NOTES

PROVIDE SURGE PROTECTION FOR INSTRUMENTS LOCATED OUTDOORS.

Magnetic Flow Transmitter

PROJECT INFORMATION

PLANT	JORDAN VALLEY WATER TREATMENT PLANT (JVWTP)	**CUSTOMER**	JORDAN VALLEY WATER
PROJECT	202001	**LOCATION**	15305 S 3200 W, HERRIMAN 3200 W, HERRIMAN, UT 84065.

GENERAL NOTE: FIELDS SHOWN WITH THE [*] SYMBOL ARE NOT SHOWN ON THE DATASHEET BUT MAY BE REQUIRED BY THE CONTRACT DOCUMENTS. THE CONTRACTOR SHALL SUBMIT COMPLETE ISA DATASHEETS FOR EACH INSTRUMENT PER ALL SPECIFIED REQUIREMENTS.

GENERAL

TAG	FIT-4135 (FE-4135)	**MEASURING PRINCIPLE**	MAGNETIC
SPECIFICATION NUMBER	17302	**PLC**	RTU-ELEC1
DRAWING NUMBER	30N20	**POWER LOCATION**	RTU-ELEC1
SERVICE	FILTER BW FLOW 1	**TYPICAL DETAIL(S)**	NF130, NF135, NA900

CONNECTION

LINE SIZE	20-IN	**PROCESS CONNECTION**	ANSI 150
LINE MATERIAL	DUCTILE IRON	**PROCESS CONN. MATERIAL**	DUCTILE IRON

FLUID

FLUID	WATER	**PRESSURE**	125 PSI
NOMINAL FLOW	12,400 GPM	**TEMPERATURE**	45-65 DEG F
FLOW RANGE	0-30,000 GPM	**VISCOSITY**	1.01
		CONDUCTIVITY	N/A

ELEMENT

ELEMENT TAG NO.	FE-4135	**PROCESS CONNECTION**	ANSI 150
ENCLOSURE CLASS	NEMA 4X	**LINER MATERIAL**	HARD RUBBER
HAZARDOUS APPROVALS	N/A	**VACUUM POSSIBILITY**	NO
TUBE SIZE	24-IN	**ELECTRODE TYPE**	MFR. STD.
TUBE MATERIAL	MFR. STD.	**ELECTRODE MATERIAL**	316 SST

TRANSMITTER

TRANSMITTER TAG NO.	FIT-4135	**HAZARDOUS APPROVALS**	N/A
MOUNTING	REM	**EMPTY PIPE DETECTION**	YES
ENCLOSURE CLASS	NEMA 4X	**BI DIRECTIONAL FLOW**	YES
POWER	24VDC-1P	**PULSE OUTPUT**	NO
AMBIENT TEMPERATURE	0-95 DEG F	**RELAY OPTIONS**	YES
OUTPUT	MODBUS RTU	**POTTED ELECTRONICS**	YES
SURGE PROTECTION	YES	**CATHODIC PROT. LINE**	NO

NOTES

PROVIDE SURGE PROTECTION FOR INSTRUMENTS LOCATED OUTDOORS.

Magnetic Flow Transmitter

PROJECT INFORMATION

PLANT	JORDAN VALLEY WATER TREATMENT PLANT (JVWTP)	**CUSTOMER**	JORDAN VALLEY WATER
PROJECT	202001	**LOCATION**	15305 S 3200 W, HERRIMAN 3200 W, HERRIMAN, UT 84065.

GENERAL NOTE: FIELDS SHOWN WITH THE [*] SYMBOL ARE NOT SHOWN ON THE DATASHEET BUT MAY BE REQUIRED BY THE CONTRACT DOCUMENTS. THE CONTRACTOR SHALL SUBMIT COMPLETE ISA DATASHEETS FOR EACH INSTRUMENT PER ALL SPECIFIED REQUIREMENTS.

GENERAL

TAG	FIT-4136 (FE-4136)	**MEASURING PRINCIPLE**	MAGNETIC
SPECIFICATION NUMBER	17302	**PLC**	RTU-ELEC2C
DRAWING NUMBER	30N20	**POWER LOCATION**	RTU-ELEC2C
SERVICE	FILTER BW FLOW 2	**TYPICAL DETAIL(S)**	NF130, NF135, NA900

CONNECTION

LINE SIZE	12-IN	**PROCESS CONNECTION**	ANSI 150
LINE MATERIAL	DUCTILE IRON	**PROCESS CONN. MATERIAL**	DUCTILE IRON

FLUID

FLUID	WATER	**PRESSURE**	125 PSI
NOMINAL FLOW	2,500 GPM	**TEMPERATURE**	45-65 DEG F
FLOW RANGE	0-4,000 GPM	**VISCOSITY**	1.01
		CONDUCTIVITY	N/A

ELEMENT

ELEMENT TAG NO.	FE-4136	**PROCESS CONNECTION**	ANSI 150
ENCLOSURE CLASS	NEMA 4X	**LINER MATERIAL**	HARD RUBBER
HAZARDOUS APPROVALS	N/A	**VACUUM POSSIBILITY**	NO
TUBE SIZE	12-IN	**ELECTRODE TYPE**	MFR. STD.
TUBE MATERIAL	MFR. STD.	**ELECTRODE MATERIAL**	316 SST

TRANSMITTER

TRANSMITTER TAG NO.	FIT-4136	**HAZARDOUS APPROVALS**	N/A
MOUNTING	REM	**EMPTY PIPE DETECTION**	YES
ENCLOSURE CLASS	NEMA 4X	**BI DIRECTIONAL FLOW**	YES
POWER	24VDC-1P	**PULSE OUTPUT**	NO
AMBIENT TEMPERATURE	0-95 DEG F	**RELAY OPTIONS**	YES
OUTPUT	MODBUS RTU	**POTTED ELECTRONICS**	YES
SURGE PROTECTION	YES	**CATHODIC PROT. LINE**	NO

NOTES

PROVIDE SURGE PROTECTION FOR INSTRUMENTS LOCATED OUTDOORS.

Magnetic Flow Transmitter

PROJECT INFORMATION

PLANT	JORDAN VALLEY WATER TREATMENT PLANT (JVWTP)	**CUSTOMER**	JORDAN VALLEY WATER
PROJECT	202001	**LOCATION**	15305 S 3200 W, HERRIMAN 3200 W, HERRIMAN, UT 84065.

GENERAL NOTE: FIELDS SHOWN WITH THE [*] SYMBOL ARE NOT SHOWN ON THE DATASHEET BUT MAY BE REQUIRED BY THE CONTRACT DOCUMENTS. THE CONTRACTOR SHALL SUBMIT COMPLETE ISA DATASHEETS FOR EACH INSTRUMENT PER ALL SPECIFIED REQUIREMENTS.

GENERAL

TAG	FIT-4411 (FE-4411)	**MEASURING PRINCIPLE**	MAGNETIC
SPECIFICATION NUMBER	17302	**PLC**	RTU-ELEC1
DRAWING NUMBER	30N24	**POWER LOCATION**	RTU-ELEC1
SERVICE	FILTER TO WASTE FLOW	**TYPICAL DETAIL(S)**	NF130, NF135, NA900

CONNECTION

LINE SIZE	24-IN	**PROCESS CONNECTION**	ANSI 150
LINE MATERIAL	DUCTILE IRON	**PROCESS CONN. MATERIAL**	DUCTILE IRON

FLUID

FLUID	WATER	**PRESSURE**	125 PSI
NOMINAL FLOW	12,400 GPM	**TEMPERATURE**	45-65 DEG F
FLOW RANGE	0-13000 GPM	**VISCOSITY**	1.01
		CONDUCTIVITY	N/A

ELEMENT

ELEMENT TAG NO.	FE-4411	**PROCESS CONNECTION**	ANSI 150
ENCLOSURE CLASS	NEMA 4X	**LINER MATERIAL**	HARD RUBBER
HAZARDOUS APPROVALS	N/A	**VACUUM POSSIBILITY**	NO
TUBE SIZE	24-IN	**ELECTRODE TYPE**	MFR. STD.
TUBE MATERIAL	MFR. STD.	**ELECTRODE MATERIAL**	316 SST

TRANSMITTER

TRANSMITTER TAG NO.	FIT-4411	**HAZARDOUS APPROVALS**	N/A
MOUNTING	REM	**EMPTY PIPE DETECTION**	YES
ENCLOSURE CLASS	NEMA 4X	**BI DIRECTIONAL FLOW**	YES
POWER	24VDC-1P	**PULSE OUTPUT**	NO
AMBIENT TEMPERATURE	0-95 DEG F	**RELAY OPTIONS**	YES
OUTPUT	MODBUS RTU	**POTTED ELECTRONICS**	NO
SURGE PROTECTION	NO	**CATHODIC PROT. LINE**	NO

NOTES

[*]

Magnetic Flow Transmitter

PROJECT INFORMATION

PLANT	JORDAN VALLEY WATER TREATMENT PLANT (JVWTP)	**CUSTOMER**	JORDAN VALLEY WATER
PROJECT	202001	**LOCATION**	15305 S 3200 W, HERRIMAN 3200 W, HERRIMAN, UT 84065.

GENERAL NOTE: FIELDS SHOWN WITH THE [*] SYMBOL ARE NOT SHOWN ON THE DATASHEET BUT MAY BE REQUIRED BY THE CONTRACT DOCUMENTS. THE CONTRACTOR SHALL SUBMIT COMPLETE ISA DATASHEETS FOR EACH INSTRUMENT PER ALL SPECIFIED REQUIREMENTS.

GENERAL

TAG	FIT-6215 (FE-6215)	**MEASURING PRINCIPLE**	MAGNETIC
SPECIFICATION NUMBER	17302	**PLC**	RTU-PEA
DRAWING NUMBER	62N04	**POWER LOCATION**	RTU-PEA
SERVICE	PC FEED DISCHARGE 1 FLOW	**TYPICAL DETAIL(S)**	NF130, NF136, NA900

CONNECTION

LINE SIZE	1-IN	**PROCESS CONNECTION**	ANSI 150
LINE MATERIAL	PVC	**PROCESS CONN. MATERIAL**	NON-METALLIC

FLUID

FLUID	PRIMARY COAGULANT	**PRESSURE**	125 PSI
NOMINAL FLOW	20 GPH	**TEMPERATURE**	45-65 DEG F
FLOW RANGE	0-60 GPH	**VISCOSITY**	N/A
		CONDUCTIVITY	N/A

ELEMENT

ELEMENT TAG NO.	FE-6215	**PROCESS CONNECTION**	ANSI 150
ENCLOSURE CLASS	NEMA 4X	**LINER MATERIAL**	PFA
HAZARDOUS APPROVALS	N/A	**VACUUM POSSIBILITY**	NO
TUBE SIZE	5/16-IN	**ELECTRODE TYPE**	MFR. STD.
TUBE MATERIAL	MFR. STD.	**ELECTRODE MATERIAL**	HASTELOY

TRANSMITTER

TRANSMITTER TAG NO.	FIT-6215	**HAZARDOUS APPROVALS**	N/A
MOUNTING	INT	**EMPTY PIPE DETECTION**	YES
ENCLOSURE CLASS	NEMA 4X	**BI DIRECTIONAL FLOW**	NO
POWER	24VDC-1P	**PULSE OUTPUT**	NO
AMBIENT TEMPERATURE	0-95 DEG F	**RELAY OPTIONS**	YES
OUTPUT	MODBUS RTU	**POTTED ELECTRONICS**	NO
SURGE PROTECTION	NO	**CATHODIC PROT. LINE**	NO

NOTES

PROVIDE HIGH ACCURACY, ZERO UPSTREAM/DOWNSTREAM FLOW METER/TRANSMITTERS. PROVIDE PHOENIX CONTACT RTU TO MODBUS TCP/IP CONVERTOR.

Magnetic Flow Transmitter

PROJECT INFORMATION

PLANT	JORDAN VALLEY WATER TREATMENT PLANT (JVWTP)	**CUSTOMER**	JORDAN VALLEY WATER
PROJECT	202001	**LOCATION**	15305 S 3200 W, HERRIMAN 3200 W, HERRIMAN, UT 84065.

GENERAL NOTE: FIELDS SHOWN WITH THE [*] SYMBOL ARE NOT SHOWN ON THE DATASHEET BUT MAY BE REQUIRED BY THE CONTRACT DOCUMENTS. THE CONTRACTOR SHALL SUBMIT COMPLETE ISA DATASHEETS FOR EACH INSTRUMENT PER ALL SPECIFIED REQUIREMENTS.

GENERAL

TAG	FIT-6216 (FE-6216)	**MEASURING PRINCIPLE**	MAGNETIC
SPECIFICATION NUMBER	17302	**PLC**	RTU-PEA
DRAWING NUMBER	62N04	**POWER LOCATION**	RTU-PEA
SERVICE	PC FEED DISCHARGE 2 FLOW	**TYPICAL DETAIL(S)**	NF130, NF136, NA900

CONNECTION

LINE SIZE	2-IN	**PROCESS CONNECTION**	ANSI 150
LINE MATERIAL	PVC	**PROCESS CONN. MATERIAL**	NON-METALLIC

FLUID

FLUID	PRIMARY COAGULANT	**PRESSURE**	125 PSI
NOMINAL FLOW	70 GPH	**TEMPERATURE**	45-65 DEG F
FLOW RANGE	0-300 GPH	**VISCOSITY**	N/A
		CONDUCTIVITY	N/A

ELEMENT

ELEMENT TAG NO.	FE-6216	**PROCESS CONNECTION**	ANSI 150
ENCLOSURE CLASS	NEMA 4X	**LINER MATERIAL**	PFA
HAZARDOUS APPROVALS	N/A	**VACUUM POSSIBILITY**	NO
TUBE SIZE	1/2-IN	**ELECTRODE TYPE**	MFR. STD.
TUBE MATERIAL	MFR. STD.	**ELECTRODE MATERIAL**	HASTELOY

TRANSMITTER

TRANSMITTER TAG NO.	FIT-6216	**HAZARDOUS APPROVALS**	N/A
MOUNTING	INT	**EMPTY PIPE DETECTION**	YES
ENCLOSURE CLASS	NEMA 4X	**BI DIRECTIONAL FLOW**	NO
POWER	24VDC-1P	**PULSE OUTPUT**	NO
AMBIENT TEMPERATURE	0-95 DEG F	**RELAY OPTIONS**	YES
OUTPUT	MODBUS RTU	**POTTED ELECTRONICS**	NO
SURGE PROTECTION	NO	**CATHODIC PROT. LINE**	NO

NOTES

PROVIDE HIGH ACCURACY, ZERO UPSTREAM/DOWNSTREAM FLOW METER/TRANSMITTERS. PROVIDE PHOENIX CONTACT RTU TO MODBUS TCP/IP CONVERTOR.

Magnetic Flow Transmitter

PROJECT INFORMATION

PLANT	JORDAN VALLEY WATER TREATMENT PLANT (JVWTP)	**CUSTOMER**	JORDAN VALLEY WATER
PROJECT	202001	**LOCATION**	15305 S 3200 W, HERRIMAN 3200 W, HERRIMAN, UT 84065.

GENERAL NOTE: FIELDS SHOWN WITH THE [*] SYMBOL ARE NOT SHOWN ON THE DATASHEET BUT MAY BE REQUIRED BY THE CONTRACT DOCUMENTS. THE CONTRACTOR SHALL SUBMIT COMPLETE ISA DATASHEETS FOR EACH INSTRUMENT PER ALL SPECIFIED REQUIREMENTS.

GENERAL

TAG	FIT-6563 (FE-6563)	**MEASURING PRINCIPLE**	MAGNETIC
SPECIFICATION NUMBER	17302	**PLC**	RTU-CS
DRAWING NUMBER	65N03	**POWER LOCATION**	RTU-CS
SERVICE	CS SMALL PMPS FLOW	**TYPICAL DETAIL(S)**	NF130, NF136, NA900

CONNECTION

LINE SIZE	1-IN	**PROCESS CONNECTION**	ANSI 150
LINE MATERIAL	CPVC	**PROCESS CONN. MATERIAL**	NON-METALLIC

FLUID

FLUID	CAUSTIC SODA	**PRESSURE**	125 PSI
NOMINAL FLOW	30 GPH	**TEMPERATURE**	45-65 DEG F
FLOW RANGE	0.3-52 GPH	**VISCOSITY**	N/A
		CONDUCTIVITY	N/A

ELEMENT

ELEMENT TAG NO.	FE-6563	**PROCESS CONNECTION**	ANSI 150
ENCLOSURE CLASS	NEMA 4X	**LINER MATERIAL**	PTFE
HAZARDOUS APPROVALS	N/A	**VACUUM POSSIBILITY**	NO
TUBE SIZE	5/16-IN	**ELECTRODE TYPE**	MFR. STD.
TUBE MATERIAL	MFR. STD.	**ELECTRODE MATERIAL**	TITANIUM

TRANSMITTER

TRANSMITTER TAG NO.	FIT-6563	**HAZARDOUS APPROVALS**	N/A
MOUNTING	INT	**EMPTY PIPE DETECTION**	YES
ENCLOSURE CLASS	NEMA 4X	**BI DIRECTIONAL FLOW**	NO
POWER	24VDC-1P	**PULSE OUTPUT**	NO
AMBIENT TEMPERATURE	0-95 DEG F	**RELAY OPTIONS**	YES
OUTPUT	MODBUS RTU	**POTTED ELECTRONICS**	NO
SURGE PROTECTION	NO	**CATHODIC PROT. LINE**	NO

NOTES

PROVIDE HIGH ACCURACY, ZERO UPSTREAM/DOWNSTREAM FLOW METER/TRANSMITTERS. PROVIDE PHOENIX CONTACT RTU TO MODBUS TCP/IP CONVERTOR.

Magnetic Flow Transmitter

PROJECT INFORMATION

PLANT	JORDAN VALLEY WATER TREATMENT PLANT (JVWTP)	**CUSTOMER**	JORDAN VALLEY WATER
PROJECT	202001	**LOCATION**	15305 S 3200 W, HERRIMAN 3200 W, HERRIMAN, UT 84065.

GENERAL NOTE: FIELDS SHOWN WITH THE [*] SYMBOL ARE NOT SHOWN ON THE DATASHEET BUT MAY BE REQUIRED BY THE CONTRACT DOCUMENTS. THE CONTRACTOR SHALL SUBMIT COMPLETE ISA DATASHEETS FOR EACH INSTRUMENT PER ALL SPECIFIED REQUIREMENTS.

GENERAL

TAG	FIT-6583 (FE-6583)	**MEASURING PRINCIPLE**	MAGNETIC
SPECIFICATION NUMBER	17302	**PLC**	RTU-CS
DRAWING NUMBER	65N04	**POWER LOCATION**	RTU-CS
SERVICE	CS FLOW METER	**TYPICAL DETAIL(S)**	NF130, NF136, NA900

CONNECTION

LINE SIZE	2-IN	**PROCESS CONNECTION**	ANSI 150
LINE MATERIAL	CPVC	**PROCESS CONN. MATERIAL**	NON-METALLIC

FLUID

FLUID	CAUSTIC SODA	**PRESSURE**	125 PSI
NOMINAL FLOW	175 GPH	**TEMPERATURE**	45-65 DEG F
FLOW RANGE	52-450 GPH	**VISCOSITY**	N/A
		CONDUCTIVITY	N/A

ELEMENT

ELEMENT TAG NO.	FE-6583	**PROCESS CONNECTION**	ANSI 150
ENCLOSURE CLASS	NEMA 4X	**LINER MATERIAL**	PTFE
HAZARDOUS APPROVALS	N/A	**VACUUM POSSIBILITY**	NO
TUBE SIZE	1-IN	**ELECTRODE TYPE**	MFR. STD.
TUBE MATERIAL	MFR. STD.	**ELECTRODE MATERIAL**	TITANIUM

TRANSMITTER

TRANSMITTER TAG NO.	FIT-6583	**HAZARDOUS APPROVALS**	N/A
MOUNTING	INT	**EMPTY PIPE DETECTION**	YES
ENCLOSURE CLASS	NEMA 4X	**BI DIRECTIONAL FLOW**	NO
POWER	24VDC-1P	**PULSE OUTPUT**	NO
AMBIENT TEMPERATURE	0-95 DEG F	**RELAY OPTIONS**	YES
OUTPUT	MODBUS RTU	**POTTED ELECTRONICS**	NO
SURGE PROTECTION	NO	**CATHODIC PROT. LINE**	NO

NOTES

PROVIDE HIGH ACCURACY, ZERO UPSTREAM/DOWNSTREAM FLOW METER/TRANSMITTERS. PROVIDE PHOENIX CONTACT RTU TO MODBUS TCP/IP CONVERTOR.

Magnetic Flow Transmitter

PROJECT INFORMATION

PLANT	JORDAN VALLEY WATER TREATMENT PLANT (JVWTP)	**CUSTOMER**	JORDAN VALLEY WATER
PROJECT	202001	**LOCATION**	15305 S 3200 W, HERRIMAN 3200 W, HERRIMAN, UT 84065.

GENERAL NOTE: FIELDS SHOWN WITH THE [*] SYMBOL ARE NOT SHOWN ON THE DATASHEET BUT MAY BE REQUIRED BY THE CONTRACT DOCUMENTS. THE CONTRACTOR SHALL SUBMIT COMPLETE ISA DATASHEETS FOR EACH INSTRUMENT PER ALL SPECIFIED REQUIREMENTS.

GENERAL

TAG	FIT-6691 (FE-6691)	**MEASURING PRINCIPLE**	MAGNETIC
SPECIFICATION NUMBER	17302	**PLC**	RTU-FL
DRAWING NUMBER	66N01	**POWER LOCATION**	RTU-FL
SERVICE	FL CARRIER WATER	**TYPICAL DETAIL(S)**	NF130, NF136, NA900

CONNECTION

LINE SIZE	[*]	**PROCESS CONNECTION**	ANSI 150
LINE MATERIAL	[*]	**PROCESS CONN. MATERIAL**	[*]

FLUID

FLUID	WATER	**PRESSURE**	125 PSI
NOMINAL FLOW	25 GPH	**TEMPERATURE**	N/A
FLOW RANGE	0-50 GPM	**VISCOSITY**	N/A
		CONDUCTIVITY	N/A

ELEMENT

ELEMENT TAG NO.	FE-6691	**PROCESS CONNECTION**	ANSI 150
ENCLOSURE CLASS	NEMA 4X	**LINER MATERIAL**	HARD RUBBER
HAZARDOUS APPROVALS	N/A	**VACUUM POSSIBILITY**	NO
TUBE SIZE	2-IN	**ELECTRODE TYPE**	MFR. STD.
TUBE MATERIAL	MFR. STD.	**ELECTRODE MATERIAL**	316 SST

TRANSMITTER

TRANSMITTER TAG NO.	FIT-6691	**HAZARDOUS APPROVALS**	N/A
MOUNTING	INT	**EMPTY PIPE DETECTION**	YES
ENCLOSURE CLASS	NEMA 4X	**BI DIRECTIONAL FLOW**	NO
POWER	24VDC-1P	**PULSE OUTPUT**	NO
AMBIENT TEMPERATURE	0-95 DEG F	**RELAY OPTIONS**	YES
OUTPUT	MODBUS RTU	**POTTED ELECTRONICS**	NO
SURGE PROTECTION	NO	**CATHODIC PROT. LINE**	NO

NOTES

PROVIDE HIGH ACCURACY, ZERO UPSTREAM/DOWNSTREAM FLOW METER/TRANSMITTERS. PROVIDE PHOENIX CONTACT RTU TO MODBUS TCP/IP CONVERTOR.

Magnetic Flow Transmitter

PROJECT INFORMATION

PLANT JORDAN VALLEY WATER TREATMENT PLANT (JVWTP)

PROJECT 202001

CUSTOMER JORDAN VALLEY WATER

LOCATION 15305 S 3200 W, HERRIMAN 3200 W, HERRIMAN, UT 84065.

GENERAL NOTE: FIELDS SHOWN WITH THE [*] SYMBOL ARE NOT SHOWN ON THE DATASHEET BUT MAY BE REQUIRED BY THE CONTRACT DOCUMENTS. THE CONTRACTOR SHALL SUBMIT COMPLETE ISA DATASHEETS FOR EACH INSTRUMENT PER ALL SPECIFIED REQUIREMENTS.

GENERAL

TAG FIT-6918 (FE-6918)

SPECIFICATION NUMBER 17302

DRAWING NUMBER 69N04

SERVICE PEA FILT AID SMALL DISCHARGE 1 FLOW

MEASURING PRINCIPLE MAGNETIC

PLC RTU-PEA

POWER LOCATION RTU-PEA

TYPICAL DETAIL(S) NF130, NF136, NA900

CONNECTION

LINE SIZE 3/4-IN

LINE MATERIAL PVC

PROCESS CONNECTION ANSI 150

PROCESS CONN. MATERIAL NON-METALLIC

FLUID

FLUID POLYMER

NOMINAL FLOW 25 GPH

FLOW RANGE 2-40 GPH

PRESSURE 125 PSI

TEMPERATURE 45-65 DEG F

VISCOSITY N/A

CONDUCTIVITY N/A

ELEMENT

ELEMENT TAG NO. FE-6918

ENCLOSURE CLASS NEMA 4X

HAZARDOUS APPROVALS N/A

TUBE SIZE 5/16-IN

TUBE MATERIAL MFR. STD.

PROCESS CONNECTION ANSI 150

LINER MATERIAL PTFE

VACUUM POSSIBILITY NO

ELECTRODE TYPE MFR. STD.

ELECTRODE MATERIAL 316 SST

TRANSMITTER

TRANSMITTER TAG NO. FIT-6918

MOUNTING INT

ENCLOSURE CLASS NEMA 4X

POWER 24VDC-1P

AMBIENT TEMPERATURE 0-95 DEG F

OUTPUT MODBUS RTU

SURGE PROTECTION NO

HAZARDOUS APPROVALS N/A

EMPTY PIPE DETECTION YES

BI DIRECTIONAL FLOW NO

PULSE OUTPUT NO

RELAY OPTIONS YES

POTTED ELECTRONICS NO

CATHODIC PROT. LINE NO

NOTES

PROVIDE HIGH ACCURACY, ZERO UPSTREAM/DOWNSTREAM FLOW METER/TRANSMITTERS. PROVIDE PHOENIX CONTACT RTU TO MODBUS TCP/IP CONVERTOR.

Magnetic Flow Transmitter

PROJECT INFORMATION

PLANT JORDAN VALLEY WATER TREATMENT PLANT (JVWTP)

PROJECT 202001

CUSTOMER JORDAN VALLEY WATER

LOCATION 15305 S 3200 W, HERRIMAN 3200 W, HERRIMAN, UT 84065.

GENERAL NOTE: FIELDS SHOWN WITH THE [*] SYMBOL ARE NOT SHOWN ON THE DATASHEET BUT MAY BE REQUIRED BY THE CONTRACT DOCUMENTS. THE CONTRACTOR SHALL SUBMIT COMPLETE ISA DATASHEETS FOR EACH INSTRUMENT PER ALL SPECIFIED REQUIREMENTS.

GENERAL

TAG FIT-6919 (FE-6919)

SPECIFICATION NUMBER 17302

DRAWING NUMBER 69N04

SERVICE PEA FILT AID SMALL DISCHARGE 1 FLOW

MEASURING PRINCIPLE MAGNETIC

PLC RTU-PEA

POWER LOCATION RTU-PEA

TYPICAL DETAIL(S) NF130, NF136, NA900

CONNECTION

LINE SIZE 3/4-IN

LINE MATERIAL PVC

PROCESS CONNECTION ANSI 150

PROCESS CONN. MATERIAL NON-METALLIC

FLUID

FLUID POLYMER

NOMINAL FLOW 25 GPH

FLOW RANGE 0-40 GPH

PRESSURE 125 PSI

TEMPERATURE 45-65 DEG F

VISCOSITY N/A

CONDUCTIVITY N/A

ELEMENT

ELEMENT TAG NO. FE-6919

ENCLOSURE CLASS NEMA 4X

HAZARDOUS APPROVALS N/A

TUBE SIZE 5/16-IN

TUBE MATERIAL MFR. STD.

PROCESS CONNECTION ANSI 150

LINER MATERIAL PTFE

VACUUM POSSIBILITY NO

ELECTRODE TYPE MFR. STD.

ELECTRODE MATERIAL 316 SST

TRANSMITTER

TRANSMITTER TAG NO. FIT-6919

MOUNTING INT

ENCLOSURE CLASS NEMA 4X

POWER 24VDC-1P

AMBIENT TEMPERATURE 0-95 DEG F

OUTPUT MODBUS RTU

SURGE PROTECTION NO

HAZARDOUS APPROVALS N/A

EMPTY PIPE DETECTION YES

BI DIRECTIONAL FLOW NO

PULSE OUTPUT NO

RELAY OPTIONS YES

POTTED ELECTRONICS NO

CATHODIC PROT. LINE NO

NOTES

PROVIDE HIGH ACCURACY, ZERO UPSTREAM/DOWNSTREAM FLOW METER/TRANSMITTERS. PROVIDE PHOENIX CONTACT RTU TO MODBUS TCP/IP CONVERTOR.

Magnetic Flow Transmitter

PROJECT INFORMATION

PLANT	JORDAN VALLEY WATER TREATMENT PLANT (JVWTP)	**CUSTOMER**	JORDAN VALLEY WATER
PROJECT	202001	**LOCATION**	15305 S 3200 W, HERRIMAN 3200 W, HERRIMAN, UT 84065.

GENERAL NOTE: FIELDS SHOWN WITH THE [*] SYMBOL ARE NOT SHOWN ON THE DATASHEET BUT MAY BE REQUIRED BY THE CONTRACT DOCUMENTS. THE CONTRACTOR SHALL SUBMIT COMPLETE ISA DATASHEETS FOR EACH INSTRUMENT PER ALL SPECIFIED REQUIREMENTS.

GENERAL

TAG	FIT-6928 (FE-6928)	**MEASURING PRINCIPLE**	MAGNETIC
SPECIFICATION NUMBER	17302	**PLC**	RTU-PEA
DRAWING NUMBER	69N06	**POWER LOCATION**	RTU-PEA
SERVICE	PEA FILT AID LARGE 1 FLOW	**TYPICAL DETAIL(S)**	NF130, NF136, NA900

CONNECTION

LINE SIZE	1-1/2-IN	**PROCESS CONNECTION**	ANSI 150
LINE MATERIAL	PVC	**PROCESS CONN. MATERIAL**	NON-METALLIC

FLUID

FLUID	POLYMER	**PRESSURE**	125 PSI
NOMINAL FLOW	60 GPH	**TEMPERATURE**	45-65 DEG F
FLOW RANGE	40-150 GPH	**VISCOSITY**	N/A
		CONDUCTIVITY	N/A

ELEMENT

ELEMENT TAG NO.	FE-6928	**PROCESS CONNECTION**	ANSI 150
ENCLOSURE CLASS	NEMA 4X	**LINER MATERIAL**	PTFE
HAZARDOUS APPROVALS	N/A	**VACUUM POSSIBILITY**	NO
TUBE SIZE	1/2-IN	**ELECTRODE TYPE**	MFR. STD.
TUBE MATERIAL	MFR. STD.	**ELECTRODE MATERIAL**	316 SST

TRANSMITTER

TRANSMITTER TAG NO.	FIT-6928	**HAZARDOUS APPROVALS**	N/A
MOUNTING	INT	**EMPTY PIPE DETECTION**	YES
ENCLOSURE CLASS	NEMA 4X	**BI DIRECTIONAL FLOW**	NO
POWER	24VDC-1P	**PULSE OUTPUT**	NO
AMBIENT TEMPERATURE	0-95 DEG F	**RELAY OPTIONS**	YES
OUTPUT	MODBUS RTU	**POTTED ELECTRONICS**	NO
SURGE PROTECTION	NO	**CATHODIC PROT. LINE**	NO

NOTES

PROVIDE HIGH ACCURACY, ZERO UPSTREAM/DOWNSTREAM FLOW METER/TRANSMITTERS. PROVIDE PHOENIX CONTACT RTU TO MODBUS TCP/IP CONVERTOR.

Magnetic Flow Transmitter

PROJECT INFORMATION

PLANT	JORDAN VALLEY WATER TREATMENT PLANT (JVWTP)	**CUSTOMER**	JORDAN VALLEY WATER
PROJECT	202001	**LOCATION**	15305 S 3200 W, HERRIMAN 3200 W, HERRIMAN, UT 84065.

GENERAL NOTE: FIELDS SHOWN WITH THE [*] SYMBOL ARE NOT SHOWN ON THE DATASHEET BUT MAY BE REQUIRED BY THE CONTRACT DOCUMENTS. THE CONTRACTOR SHALL SUBMIT COMPLETE ISA DATASHEETS FOR EACH INSTRUMENT PER ALL SPECIFIED REQUIREMENTS.

GENERAL

TAG	FIT-6929 (FE-6929)	**MEASURING PRINCIPLE**	MAGNETIC
SPECIFICATION NUMBER	17302	**PLC**	RTU-PEA
DRAWING NUMBER	69N06	**POWER LOCATION**	RTU-PEA
SERVICE	PEA FILT AID LARGE 2 FLOW	**TYPICAL DETAIL(S)**	NF130, NF136, NA900

CONNECTION

LINE SIZE	1-1/2-IN	**PROCESS CONNECTION**	ANSI 150
LINE MATERIAL	PVC	**PROCESS CONN. MATERIAL**	NON-METALLIC

FLUID

FLUID	POLYMER	**PRESSURE**	125 PSI
NOMINAL FLOW	60 GPH	**TEMPERATURE**	45-65 DEG F
FLOW RANGE	40-150 GPH	**VISCOSITY**	N/A
		CONDUCTIVITY	N/A

ELEMENT

ELEMENT TAG NO.	FE-6929	**PROCESS CONNECTION**	ANSI 150
ENCLOSURE CLASS	NEMA 4X	**LINER MATERIAL**	PTFE
HAZARDOUS APPROVALS	N/A	**VACUUM POSSIBILITY**	NO
TUBE SIZE	1/2-IN	**ELECTRODE TYPE**	MFR. STD.
TUBE MATERIAL	MFR. STD.	**ELECTRODE MATERIAL**	316 SST

TRANSMITTER

TRANSMITTER TAG NO.	FIT-6929	**HAZARDOUS APPROVALS**	N/A
MOUNTING	INT	**EMPTY PIPE DETECTION**	YES
ENCLOSURE CLASS	NEMA 4X	**BI DIRECTIONAL FLOW**	NO
POWER	24VDC-1P	**PULSE OUTPUT**	NO
AMBIENT TEMPERATURE	0-95 DEG F	**RELAY OPTIONS**	YES
OUTPUT	MODBUS RTU	**POTTED ELECTRONICS**	NO
SURGE PROTECTION	NO	**CATHODIC PROT. LINE**	NO

NOTES

PROVIDE HIGH ACCURACY, ZERO UPSTREAM/DOWNSTREAM FLOW METER/TRANSMITTERS. PROVIDE PHOENIX CONTACT RTU TO MODBUS TCP/IP CONVERTOR.

Magnetic Flow Transmitter

PROJECT INFORMATION

PLANT JORDAN VALLEY WATER TREATMENT PLANT (JVWTP)
PROJECT 202001
CUSTOMER JORDAN VALLEY WATER
LOCATION 15305 S 3200 W, HERRIMAN 3200 W, HERRIMAN, UT 84065.

GENERAL NOTE: FIELDS SHOWN WITH THE [*] SYMBOL ARE NOT SHOWN ON THE DATASHEET BUT MAY BE REQUIRED BY THE CONTRACT DOCUMENTS. THE CONTRACTOR SHALL SUBMIT COMPLETE ISA DATASHEETS FOR EACH INSTRUMENT PER ALL SPECIFIED REQUIREMENTS.

GENERAL

TAG FIT-6937 (FE-6937)
SPECIFICATION NUMBER 17302
DRAWING NUMBER 69N08
SERVICE PEA FLOC AID FEED 1 FLOW
MEASURING PRINCIPLE MAGNETIC
PLC RTU-PEA
POWER LOCATION RTU-PEA
TYPICAL DETAIL(S) NF130, NF136, NA900

CONNECTION

LINE SIZE 2-IN
LINE MATERIAL PVC
PROCESS CONNECTION ANSI 150
PROCESS CONN. MATERIAL NON-METALLIC

FLUID

FLUID POLYMER
NOMINAL FLOW 100 GPH
FLOW RANGE 10-700 GPH
PRESSURE 125 PSI
TEMPERATURE 45-65 DEG F
VISCOSITY N/A
CONDUCTIVITY N/A

ELEMENT

ELEMENT TAG NO. FE-6937
ENCLOSURE CLASS NEMA 4X
HAZARDOUS APPROVALS N/A
TUBE SIZE 1-IN
TUBE MATERIAL MFR. STD.
PROCESS CONNECTION ANSI 150
LINER MATERIAL PTFE
VACUUM POSSIBILITY NO
ELECTRODE TYPE MFR. STD.
ELECTRODE MATERIAL 316 SST

TRANSMITTER

TRANSMITTER TAG NO. FIT-6937
MOUNTING INT
ENCLOSURE CLASS NEMA 4X
POWER 24VDC-1P
AMBIENT TEMPERATURE 0-95 DEG F
OUTPUT MODBUS RTU
SURGE PROTECTION NO
HAZARDOUS APPROVALS N/A
EMPTY PIPE DETECTION YES
BI DIRECTIONAL FLOW NO
PULSE OUTPUT NO
RELAY OPTIONS YES
POTTED ELECTRONICS NO
CATHODIC PROT. LINE NO

NOTES

PROVIDE HIGH ACCURACY, ZERO UPSTREAM/DOWNSTREAM FLOW METER/TRANSMITTERS. PROVIDE PHOENIX CONTACT RTU TO MODBUS TCP/IP CONVERTOR.

Magnetic Flow Transmitter

PROJECT INFORMATION

PLANT	JORDAN VALLEY WATER TREATMENT PLANT (JVWTP)	**CUSTOMER**	JORDAN VALLEY WATER
PROJECT	202001	**LOCATION**	15305 S 3200 W, HERRIMAN 3200 W, HERRIMAN, UT 84065.

GENERAL NOTE: FIELDS SHOWN WITH THE [*] SYMBOL ARE NOT SHOWN ON THE DATASHEET BUT MAY BE REQUIRED BY THE CONTRACT DOCUMENTS. THE CONTRACTOR SHALL SUBMIT COMPLETE ISA DATASHEETS FOR EACH INSTRUMENT PER ALL SPECIFIED REQUIREMENTS.

GENERAL

TAG	FIT-6938 (FE-6938)	**MEASURING PRINCIPLE**	MAGNETIC
SPECIFICATION NUMBER	17302	**PLC**	RTU-PEA
DRAWING NUMBER	69N08	**POWER LOCATION**	RTU-PEA
SERVICE	PEA FLOC AID FEED 2 FLOW	**TYPICAL DETAIL(S)**	NF130, NF136, NA900

CONNECTION

LINE SIZE	2-IN	**PROCESS CONNECTION**	ANSI 150
LINE MATERIAL	PVC	**PROCESS CONN. MATERIAL**	NON-METALLIC

FLUID

FLUID	POLYMER	**PRESSURE**	125 PSI
NOMINAL FLOW	100 GPH	**TEMPERATURE**	45-65 DEG F
FLOW RANGE	10-700 GPH	**VISCOSITY**	N/A
		CONDUCTIVITY	N/A

ELEMENT

ELEMENT TAG NO.	FE-6938	**PROCESS CONNECTION**	ANSI 150
ENCLOSURE CLASS	NEMA 4X	**LINER MATERIAL**	PTFE
HAZARDOUS APPROVALS	N/A	**VACUUM POSSIBILITY**	NO
TUBE SIZE	1-IN	**ELECTRODE TYPE**	MFR. STD.
TUBE MATERIAL	MFR. STD.	**ELECTRODE MATERIAL**	316 SST

TRANSMITTER

TRANSMITTER TAG NO.	FIT-6938	**HAZARDOUS APPROVALS**	N/A
MOUNTING	INT	**EMPTY PIPE DETECTION**	YES
ENCLOSURE CLASS	NEMA 4X	**BI DIRECTIONAL FLOW**	NO
POWER	24VDC-1P	**PULSE OUTPUT**	NO
AMBIENT TEMPERATURE	0-95 DEG F	**RELAY OPTIONS**	YES
OUTPUT	MODBUS RTU	**POTTED ELECTRONICS**	NO
SURGE PROTECTION	NO	**CATHODIC PROT. LINE**	NO

NOTES

PROVIDE HIGH ACCURACY, ZERO UPSTREAM/DOWNSTREAM FLOW METER/TRANSMITTERS. PROVIDE PHOENIX CONTACT RTU TO MODBUS TCP/IP CONVERTOR.

Magnetic Flow Transmitter

PROJECT INFORMATION

PLANT	JORDAN VALLEY WATER TREATMENT PLANT (JVWTP)	**CUSTOMER**	JORDAN VALLEY WATER
PROJECT	202001	**LOCATION**	15305 S 3200 W, HERRIMAN 3200 W, HERRIMAN, UT 84065.

GENERAL NOTE: FIELDS SHOWN WITH THE [*] SYMBOL ARE NOT SHOWN ON THE DATASHEET BUT MAY BE REQUIRED BY THE CONTRACT DOCUMENTS. THE CONTRACTOR SHALL SUBMIT COMPLETE ISA DATASHEETS FOR EACH INSTRUMENT PER ALL SPECIFIED REQUIREMENTS.

GENERAL

TAG	FIT-6948 (FE-6948)	**MEASURING PRINCIPLE**	MAGNETIC
SPECIFICATION NUMBER	17302	**PLC**	RTU-PEA
DRAWING NUMBER	69N10	**POWER LOCATION**	RTU-PEA
SERVICE	PEA FLOC AID FEED 3 FLOW	**TYPICAL DETAIL(S)**	NF130, NF136, NA900

CONNECTION

LINE SIZE	2-IN	**PROCESS CONNECTION**	ANSI 150
LINE MATERIAL	PVC	**PROCESS CONN. MATERIAL**	NON-METALLIC

FLUID

FLUID	POLYMER	**PRESSURE**	125 PSI
NOMINAL FLOW	100 GPH	**TEMPERATURE**	45-65 DEG F
FLOW RANGE	10-700 GPH	**VISCOSITY**	N/A
		CONDUCTIVITY	N/A

ELEMENT

ELEMENT TAG NO.	FE-6948	**PROCESS CONNECTION**	ANSI 150
ENCLOSURE CLASS	NEMA 4X	**LINER MATERIAL**	PTFE
HAZARDOUS APPROVALS	N/A	**VACUUM POSSIBILITY**	NO
TUBE SIZE	1-IN	**ELECTRODE TYPE**	MFR. STD.
TUBE MATERIAL	MFR. STD.	**ELECTRODE MATERIAL**	316 SST

TRANSMITTER

TRANSMITTER TAG NO.	FIT-6948	**HAZARDOUS APPROVALS**	N/A
MOUNTING	INT	**EMPTY PIPE DETECTION**	YES
ENCLOSURE CLASS	NEMA 4X	**BI DIRECTIONAL FLOW**	NO
POWER	24VDC-1P	**PULSE OUTPUT**	NO
AMBIENT TEMPERATURE	0-95 DEG F	**RELAY OPTIONS**	YES
OUTPUT	MODBUS RTU	**POTTED ELECTRONICS**	NO
SURGE PROTECTION	NO	**CATHODIC PROT. LINE**	NO

NOTES

PROVIDE HIGH ACCURACY, ZERO UPSTREAM/DOWNSTREAM FLOW METER/TRANSMITTERS. PROVIDE PHOENIX CONTACT RTU TO MODBUS TCP/IP CONVERTOR.

Magnetic Flow Transmitter

PROJECT INFORMATION

PLANT	JORDAN VALLEY WATER TREATMENT PLANT (JVWTP)	**CUSTOMER**	JORDAN VALLEY WATER
PROJECT	202001	**LOCATION**	15305 S 3200 W, HERRIMAN 3200 W, HERRIMAN, UT 84065.

GENERAL NOTE: FIELDS SHOWN WITH THE [*] SYMBOL ARE NOT SHOWN ON THE DATASHEET BUT MAY BE REQUIRED BY THE CONTRACT DOCUMENTS. THE CONTRACTOR SHALL SUBMIT COMPLETE ISA DATASHEETS FOR EACH INSTRUMENT PER ALL SPECIFIED REQUIREMENTS.

GENERAL

TAG	FIT-6949 (FE-6949)	**MEASURING PRINCIPLE**	MAGNETIC
SPECIFICATION NUMBER	17302	**PLC**	RTU-PEA
DRAWING NUMBER	69N10	**POWER LOCATION**	RTU-PEA
SERVICE	PEA FLOC AID FEED 4 FLOW	**TYPICAL DETAIL(S)**	NF130, NF136, NA900

CONNECTION

LINE SIZE	2-IN	**PROCESS CONNECTION**	ANSI 150
LINE MATERIAL	PVC	**PROCESS CONN. MATERIAL**	NON-METALLIC

FLUID

FLUID	POLYMER	**PRESSURE**	125 PSI
NOMINAL FLOW	100 GPH	**TEMPERATURE**	45-65 DEG F
FLOW RANGE	10-700 GPH	**VISCOSITY**	N/A
		CONDUCTIVITY	N/A

ELEMENT

ELEMENT TAG NO.	FE-6949	**PROCESS CONNECTION**	ANSI 150
ENCLOSURE CLASS	NEMA 4X	**LINER MATERIAL**	PTFE
HAZARDOUS APPROVALS	N/A	**VACUUM POSSIBILITY**	NO
TUBE SIZE	1-IN	**ELECTRODE TYPE**	MFR. STD.
TUBE MATERIAL	MFR. STD.	**ELECTRODE MATERIAL**	316 SST

TRANSMITTER

TRANSMITTER TAG NO.	FIT-6949	**HAZARDOUS APPROVALS**	N/A
MOUNTING	INT	**EMPTY PIPE DETECTION**	YES
ENCLOSURE CLASS	NEMA 4X	**BI DIRECTIONAL FLOW**	NO
POWER	24VDC-1P	**PULSE OUTPUT**	NO
AMBIENT TEMPERATURE	0-95 DEG F	**RELAY OPTIONS**	YES
OUTPUT	MODBUS RTU	**POTTED ELECTRONICS**	NO
SURGE PROTECTION	NO	**CATHODIC PROT. LINE**	NO

NOTES

PROVIDE HIGH ACCURACY, ZERO UPSTREAM/DOWNSTREAM FLOW METER/TRANSMITTERS. PROVIDE PHOENIX CONTACT RTU TO MODBUS TCP/IP CONVERTOR.

Magnetic Flow Transmitter

PROJECT INFORMATION

PLANT	JORDAN VALLEY WATER TREATMENT PLANT (JVWTP)	**CUSTOMER**	JORDAN VALLEY WATER
PROJECT	202001	**LOCATION**	15305 S 3200 W, HERRIMAN 3200 W, HERRIMAN, UT 84065.

GENERAL NOTE: FIELDS SHOWN WITH THE [*] SYMBOL ARE NOT SHOWN ON THE DATASHEET BUT MAY BE REQUIRED BY THE CONTRACT DOCUMENTS. THE CONTRACTOR SHALL SUBMIT COMPLETE ISA DATASHEETS FOR EACH INSTRUMENT PER ALL SPECIFIED REQUIREMENTS.

GENERAL

TAG	FIT-6958 (FE-6958)	**MEASURING PRINCIPLE**	MAGNETIC
SPECIFICATION NUMBER	17302	**PLC**	RTU-PEA
DRAWING NUMBER	69N12	**POWER LOCATION**	RTU-PEA
SERVICE	PEA FILT AID DOSING FLOW	**TYPICAL DETAIL(S)**	NF130, NF136, NA900

CONNECTION

LINE SIZE	3/4-IN	**PROCESS CONNECTION**	ANSI 150
LINE MATERIAL	PVC	**PROCESS CONN. MATERIAL**	NON-METALLIC

FLUID

FLUID	POLYMER	**PRESSURE**	125 PSI
NOMINAL FLOW	8 GPH	**TEMPERATURE**	45-65 DEG F
FLOW RANGE	0.3-40 GPH	**VISCOSITY**	N/A
		CONDUCTIVITY	N/A

ELEMENT

ELEMENT TAG NO.	FE-6958	**PROCESS CONNECTION**	ANSI 150
ENCLOSURE CLASS	NEMA 4X	**LINER MATERIAL**	PTFE
HAZARDOUS APPROVALS	N/A	**VACUUM POSSIBILITY**	NO
TUBE SIZE	5/16-IN	**ELECTRODE TYPE**	MFR. STD.
TUBE MATERIAL	MFR. STD.	**ELECTRODE MATERIAL**	316 SST

TRANSMITTER

TRANSMITTER TAG NO.	FIT-6958	**HAZARDOUS APPROVALS**	N/A
MOUNTING	INT	**EMPTY PIPE DETECTION**	YES
ENCLOSURE CLASS	NEMA 4X	**BI DIRECTIONAL FLOW**	NO
POWER	24VDC-1P	**PULSE OUTPUT**	NO
AMBIENT TEMPERATURE	0-95 DEG F	**RELAY OPTIONS**	YES
OUTPUT	MODBUS RTU	**POTTED ELECTRONICS**	NO
SURGE PROTECTION	NO	**CATHODIC PROT. LINE**	NO

NOTES

PROVIDE HIGH ACCURACY, ZERO UPSTREAM/DOWNSTREAM FLOW METER/TRANSMITTERS. PROVIDE PHOENIX CONTACT RTU TO MODBUS TCP/IP CONVERTOR.

Magnetic Flow Transmitter

PROJECT INFORMATION

PLANT	JORDAN VALLEY WATER TREATMENT PLANT (JVWTP)	**CUSTOMER**	JORDAN VALLEY WATER
PROJECT	202001	**LOCATION**	15305 S 3200 W, HERRIMAN 3200 W, HERRIMAN, UT 84065.

GENERAL NOTE: FIELDS SHOWN WITH THE [*] SYMBOL ARE NOT SHOWN ON THE DATASHEET BUT MAY BE REQUIRED BY THE CONTRACT DOCUMENTS. THE CONTRACTOR SHALL SUBMIT COMPLETE ISA DATASHEETS FOR EACH INSTRUMENT PER ALL SPECIFIED REQUIREMENTS.

GENERAL

TAG	FIT-7108 (FE-7108)	**MEASURING PRINCIPLE**	MAGNETIC
SPECIFICATION NUMBER	17302	**PLC**	RTU-PEA
DRAWING NUMBER	71N03	**POWER LOCATION**	RTU-PEA
SERVICE	PEC FEED DISCHARGE FLOW	**TYPICAL DETAIL(S)**	NF130, NF136, NA900

CONNECTION

LINE SIZE	3/4-IN	**PROCESS CONNECTION**	ANSI 150
LINE MATERIAL	PVC	**PROCESS CONN. MATERIAL**	NON-METALLIC

FLUID

FLUID	PEC	**PRESSURE**	125 PSI
NOMINAL FLOW	6 GPH	**TEMPERATURE**	45-65 DEG F
FLOW RANGE	0.1-25 GPH	**VISCOSITY**	N/A
		CONDUCTIVITY	N/A

ELEMENT

ELEMENT TAG NO.	FE-7108	**PROCESS CONNECTION**	ANSI 150
ENCLOSURE CLASS	NEMA 4X	**LINER MATERIAL**	PTFE
HAZARDOUS APPROVALS	N/A	**VACUUM POSSIBILITY**	NO
TUBE SIZE	5/16-IN	**ELECTRODE TYPE**	MFR. STD.
TUBE MATERIAL	MFR. STD.	**ELECTRODE MATERIAL**	316 SST

TRANSMITTER

TRANSMITTER TAG NO.	FIT-7108	**HAZARDOUS APPROVALS**	N/A
MOUNTING	INT	**EMPTY PIPE DETECTION**	YES
ENCLOSURE CLASS	NEMA 4X	**BI DIRECTIONAL FLOW**	NO
POWER	24VDC-1P	**PULSE OUTPUT**	NO
AMBIENT TEMPERATURE	0-95 DEG F	**RELAY OPTIONS**	YES
OUTPUT	MODBUS RTU	**POTTED ELECTRONICS**	NO
SURGE PROTECTION	NO	**CATHODIC PROT. LINE**	NO

NOTES

PROVIDE HIGH ACCURACY, ZERO UPSTREAM/DOWNSTREAM FLOW METER/TRANSMITTERS. PROVIDE PHOENIX CONTACT RTU TO MODBUS TCP/IP CONVERTOR.